Vinafix

Calcutta 10

CS Build (A01)

2010.04.09

INVENTEC			
TITLE Calcutta10			
SIZE A3	CODE CS	DOC. NUMBER Model_No	REV 000
CHANGE by Drawer_Name	22-Mar-2010	SHEET 1 OF 56	

www.vinafix.vn

TABLE OF CONTENTS

PAGE

1. COVER PAGE
2. INDEX
3. BLOCK DIAGRAM
4. POWER SEQUENCE BLOCK
5. PCB
6. SYSTEM POWER
7. SYSTEM POWER
8. SYSTEM POWER
9. SYSTEM POWER
10. SYSTEM POWER
11. SYSTEM POWER
12. SYSTEM POWER
13. SYSTEM POWER
14. SYSTEM POWER
15. SUPER I/O(KBC)
16. K/B & TP/B CONN
17. FAN & THERMAL
18. LAN
19. RJ45 & TRANSFORMER
20. AUDIO CODEC
21. AUDIO JACK
22. LCM
23. RGB CONN
24. BLANK
25. BLANK
26. SATA HDD & ODD
27. CARD READER
28. BLANK
29. BLANK
30. WLAN

PAGE

31. BLANK
32. BLANK
33. LED
34. CLOCK GENERATOR
35. DDR DIMM0
36. DDR DIMM1
37. CPU 1
38. CPU 2
39. CPU 3
40. CPU 4
41. CPU 5
42. CPU 6
43. PCH 1
44. PCH 2
45. PCH 3
46. PCH 4
47. PCH 5
48. PCH 6
49. PCH 7
50. PCH 8
51. PCH 9
52. BLANK
53. EMI
54. TP SWITCH BOARD
55. POWER BOARD
56. USB/CARDREADER

INVENTEC			
TITLE Calcutta10 Index			
SIZE A3	CODE CS	DOC. NUMBER Model_No	REV 000
CHANGE by Drawer_Name	7-Jan-2010	SHEET 2 OF 56	

www.vinafix.vn

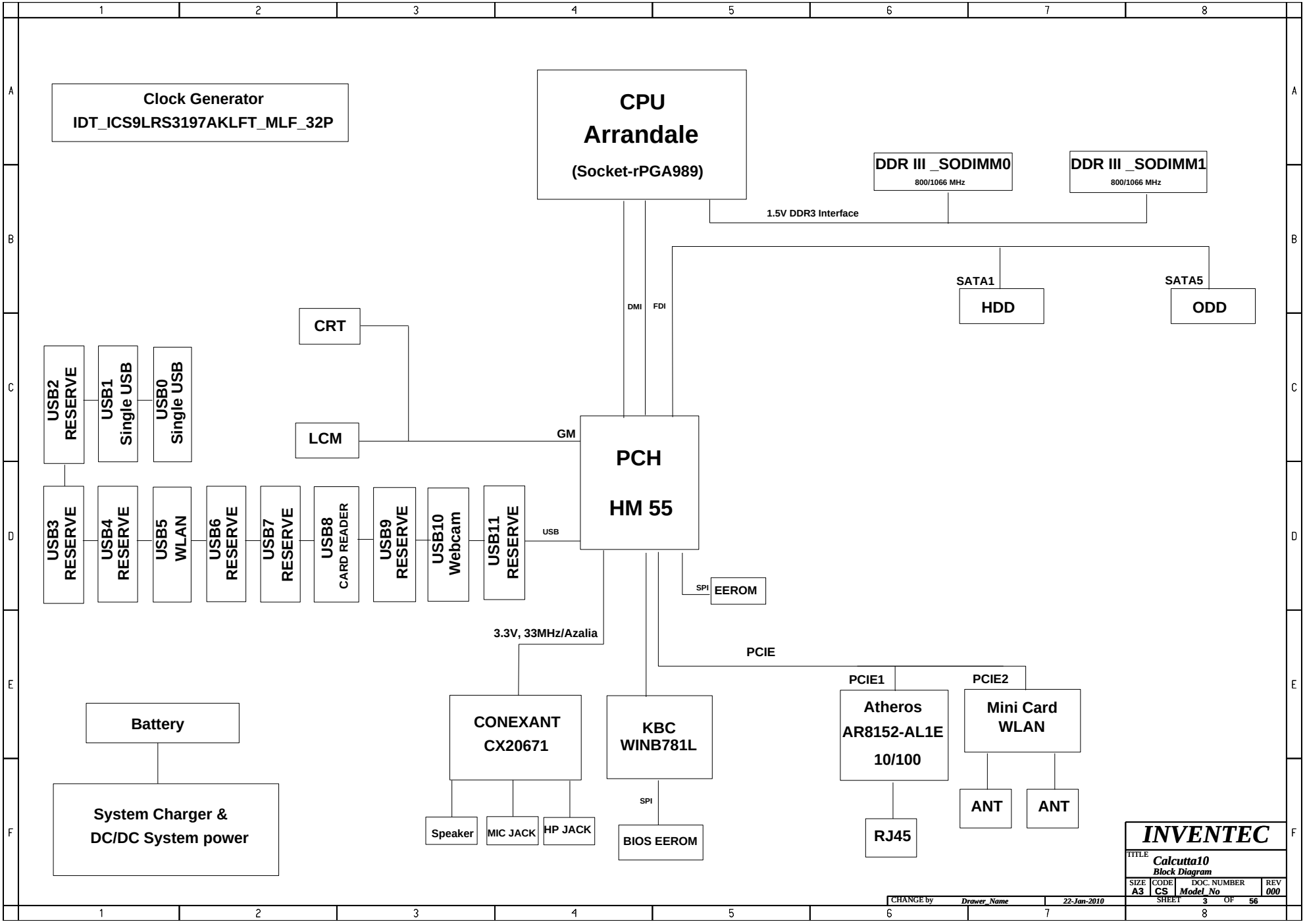

www.vinafix.vn

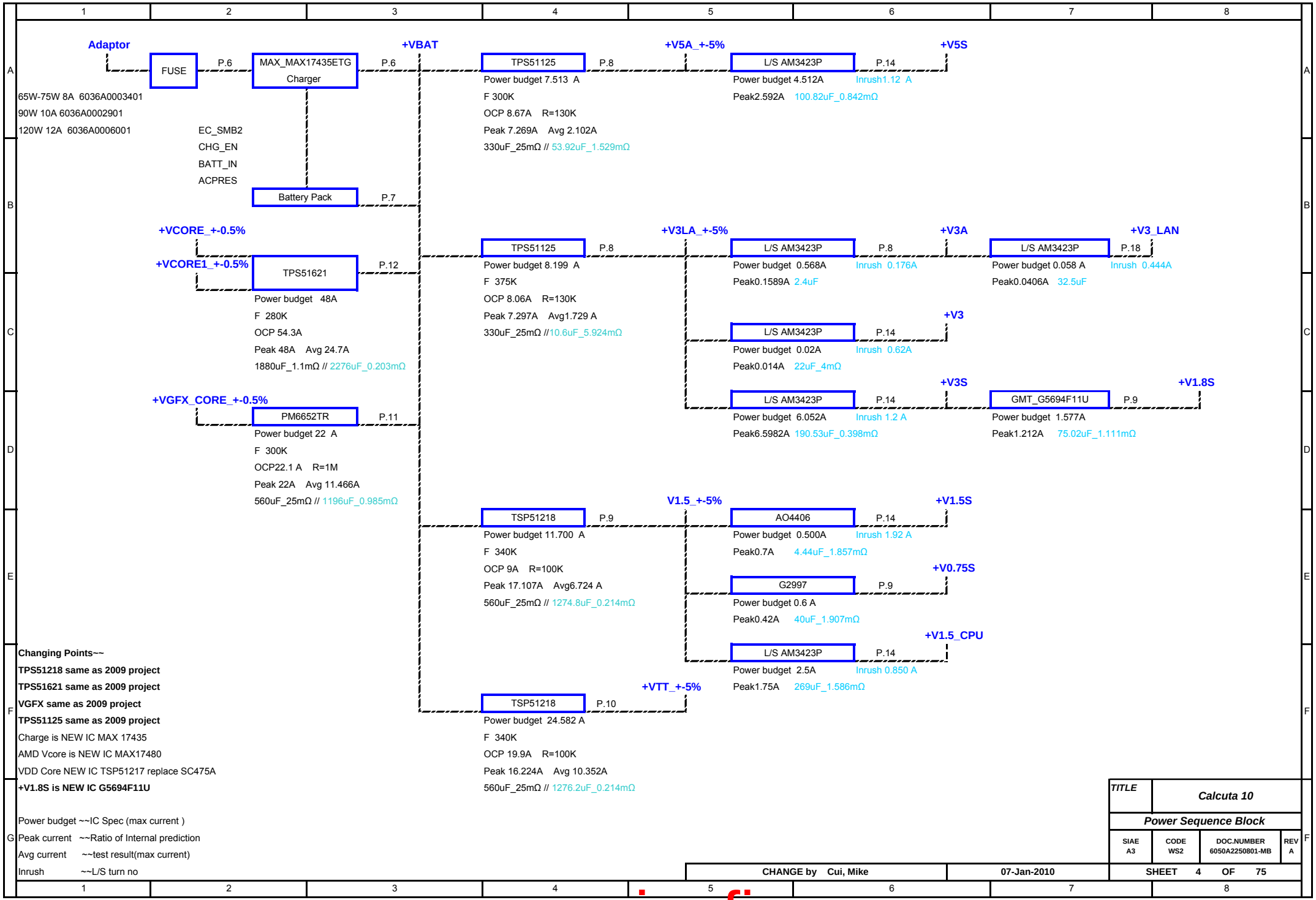

Changing Points~~

TPS51218 same as 2009 project

TPS51621 same as 2009 project

VGFX same as 2009 project

TPS51125 same as 2009 project

Charge is NEW IC MAX 17435

AMD Vcore is NEW IC MAX17480

VDD Core NEW IC TSP51217 replace SC475A

+V1.8S is NEW IC G5694F11U

Power budget ~~IC Spec (max current)

Peak current ~~Ratio of Internal prediction

Avg current ~~test result(max current)

Inrush ~~L/S turn no

TITLE	*Calcuta 10*		
Power Sequence Block			
SIAE A3	CODE WS2	DOC.NUMBER 6050A2250801-MB	REV A
CHANGE by Cui, Mike	07-Jan-2010	SHEET 4 OF 75	

www.vinafix.vn

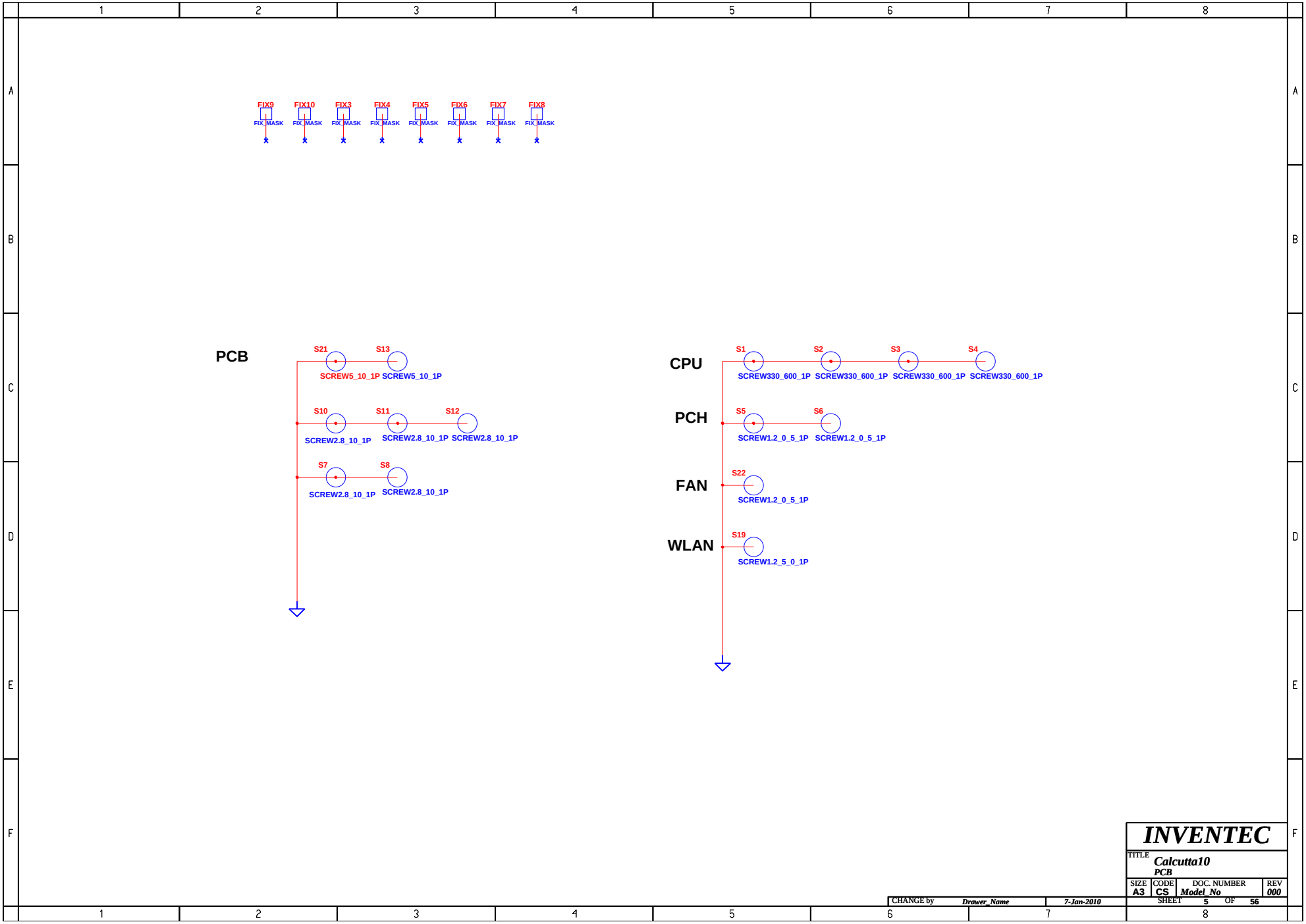

www.vinafix.vn

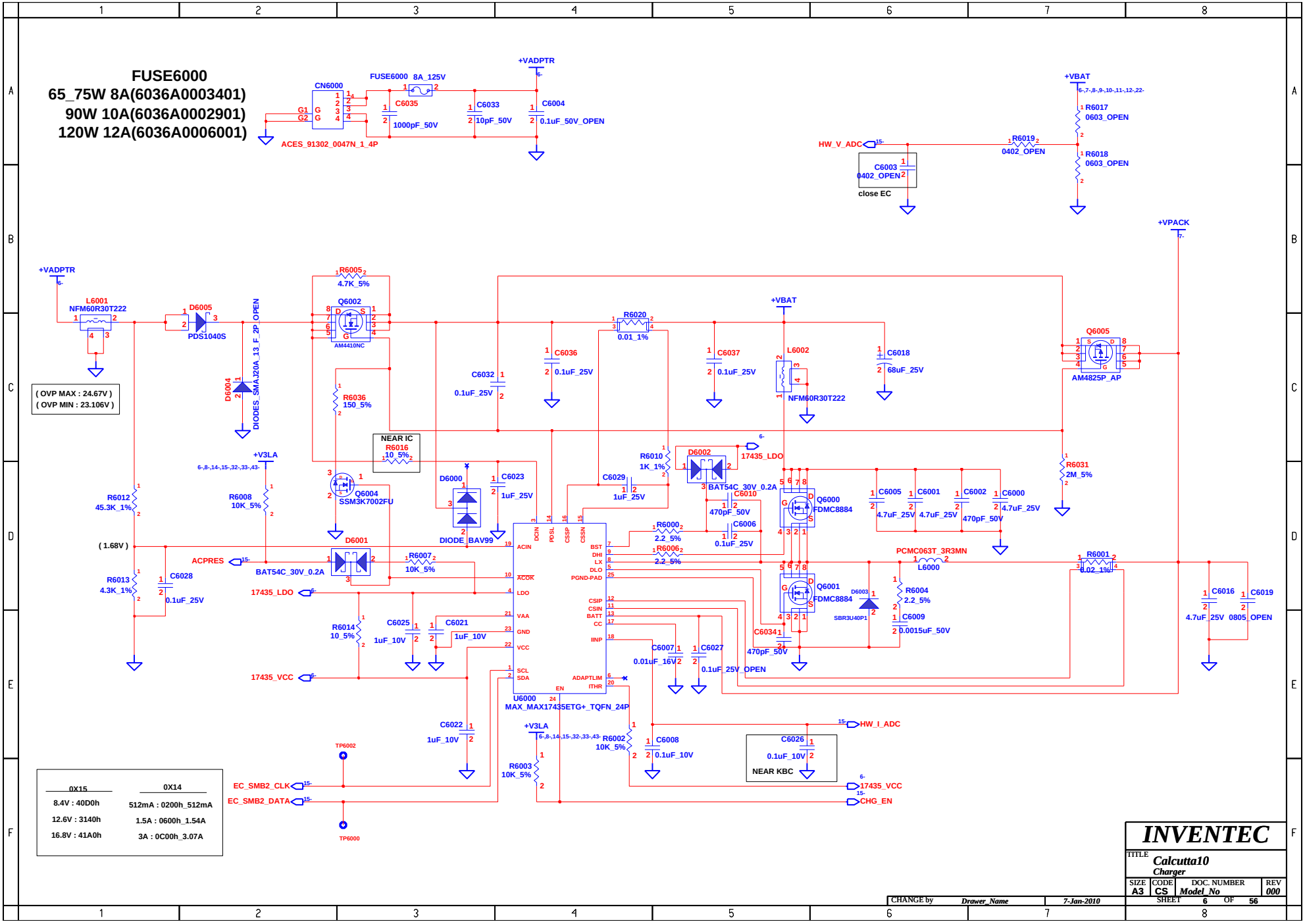

www.vinafix.vn

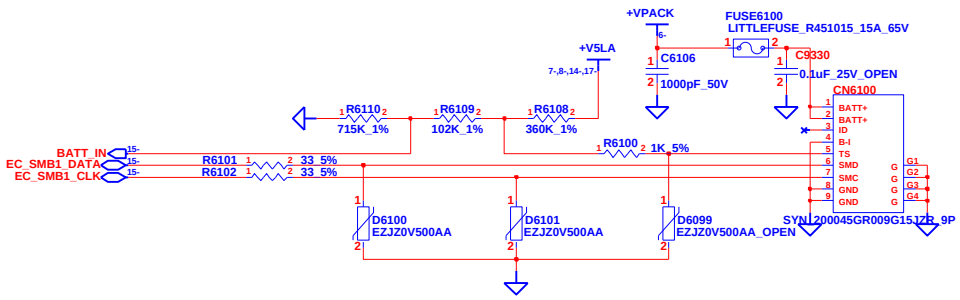

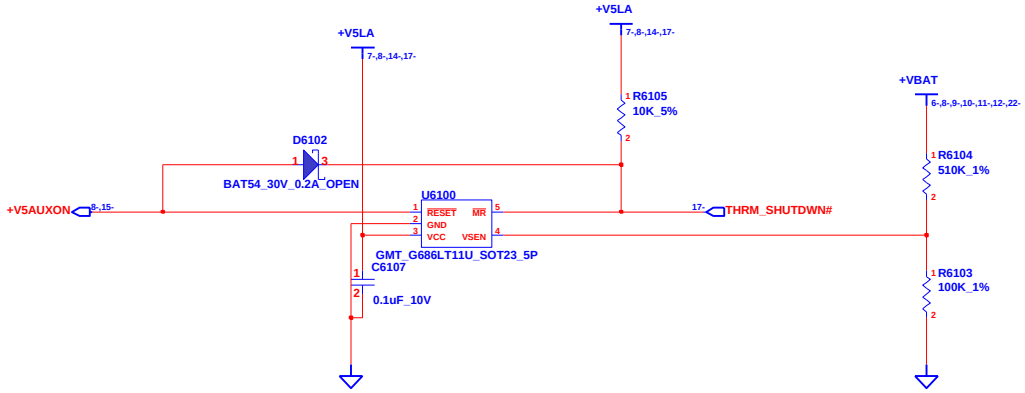

INVENTEC

TITLE
Calcutta10
Battery, Reset IC

SIZE	CODE	DOC. NUMBER	REV
A3	CS	*Model_No*	*000*

CHANGE by *Drawer_Name* *7-Jan-2010*

SHEET 7 OF 56

www.vinafix.vn

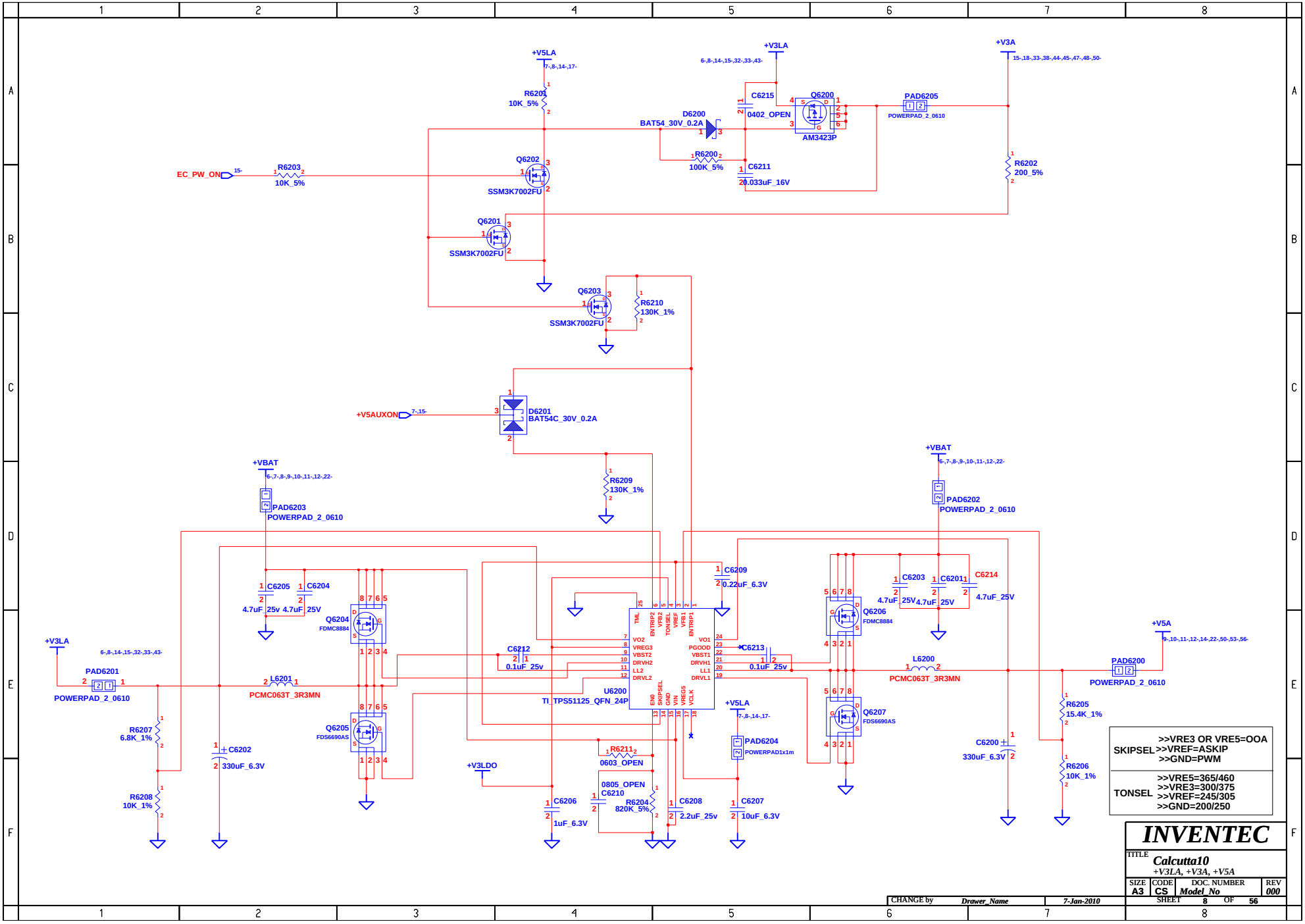

www.vinafix.vn

+V1.5 +V1.8S +V0.75S

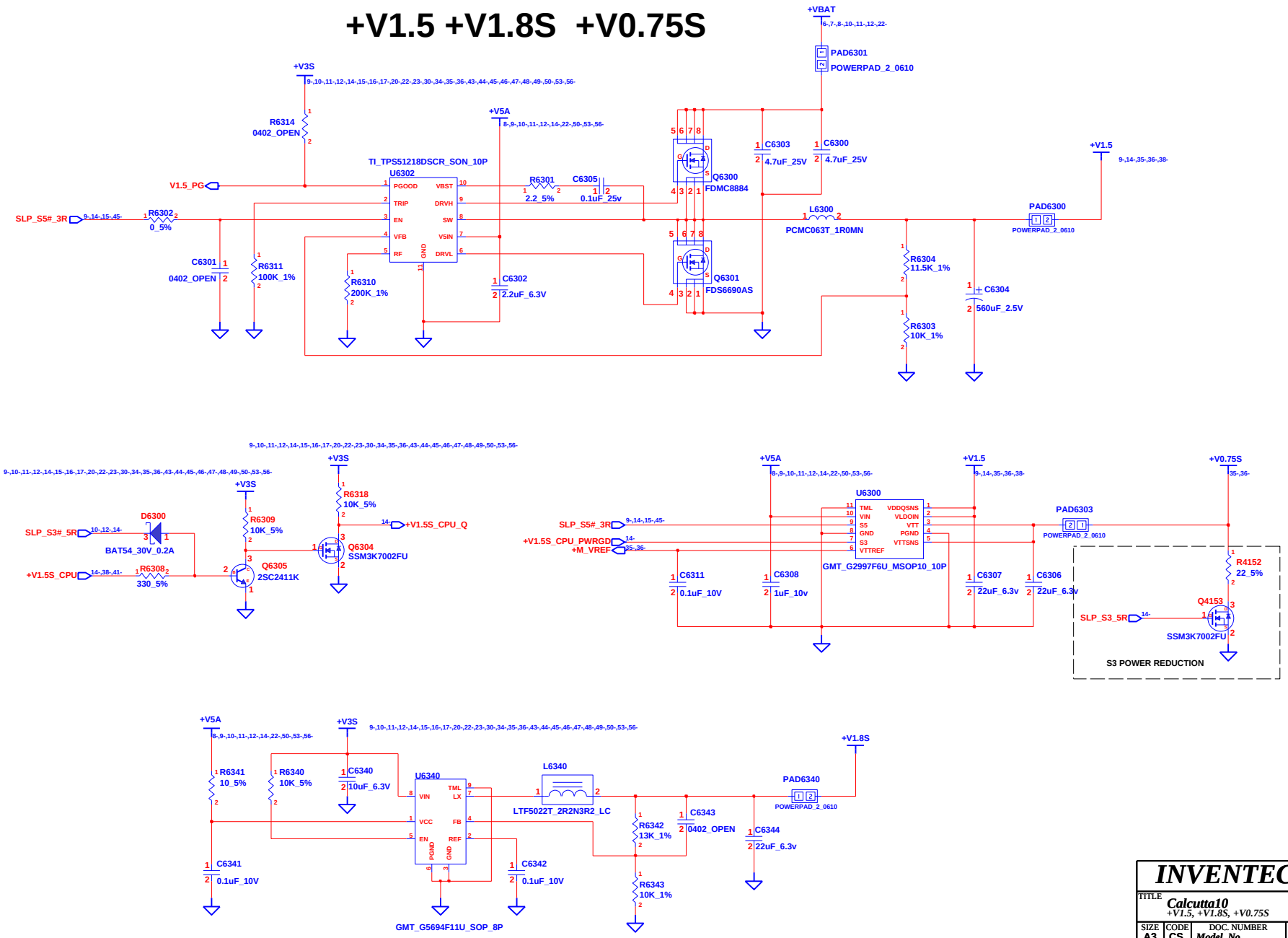

INVENTEC			
TITLE: Calcutta10 +V1.5, +V1.8S, +V0.75S			
SIZE: A3	CODE: CS	DOC. NUMBER: Model_No	REV: 000
CHANGE by: Drawer_Name	7-Jan-2010	SHEET 9 OF 56	

www.vinafix.vn

+VTT

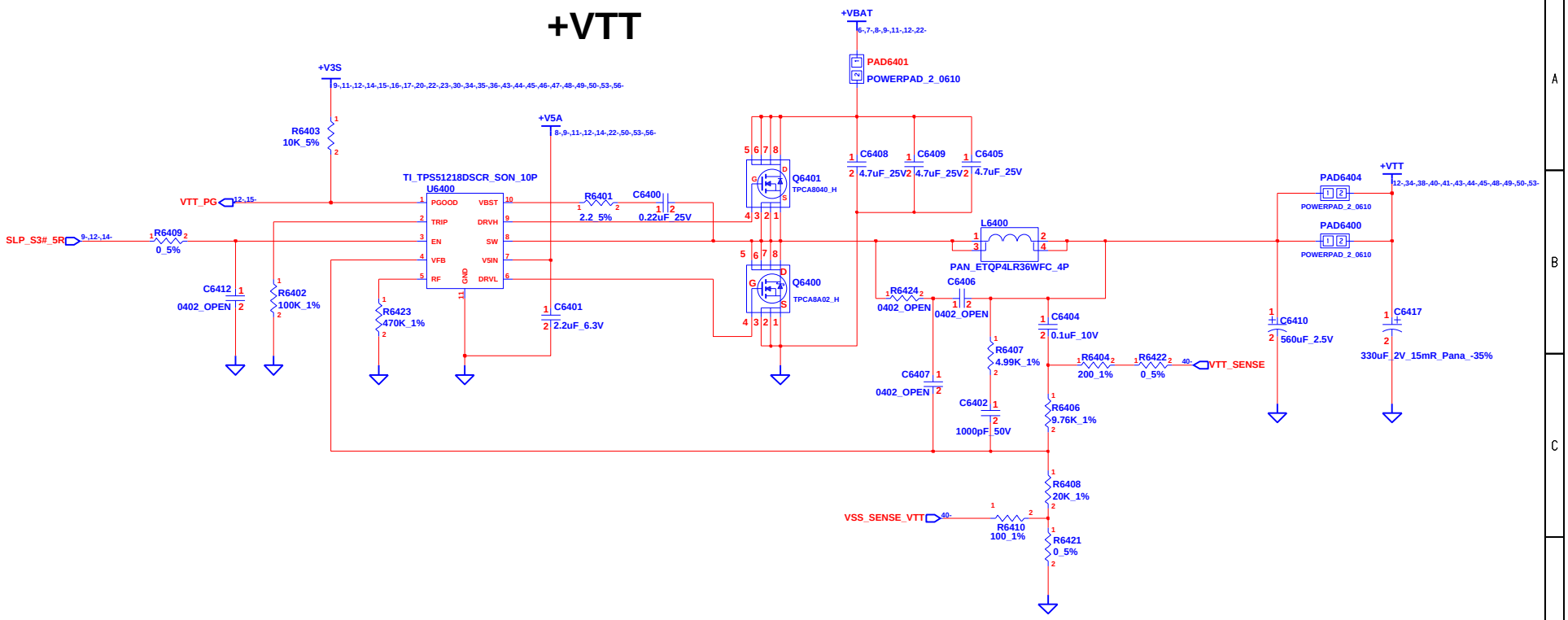

INVENTEC			
TITLE: Calcutta10 +VTT, +V1.05S			
SIZE: A3	CODE: CS	DOC. NUMBER: Model_No	REV: 000
CHANGE by: Drawer_Name	7-Jan-2010	SHEET 10 OF 56	

www.vinafix.vn

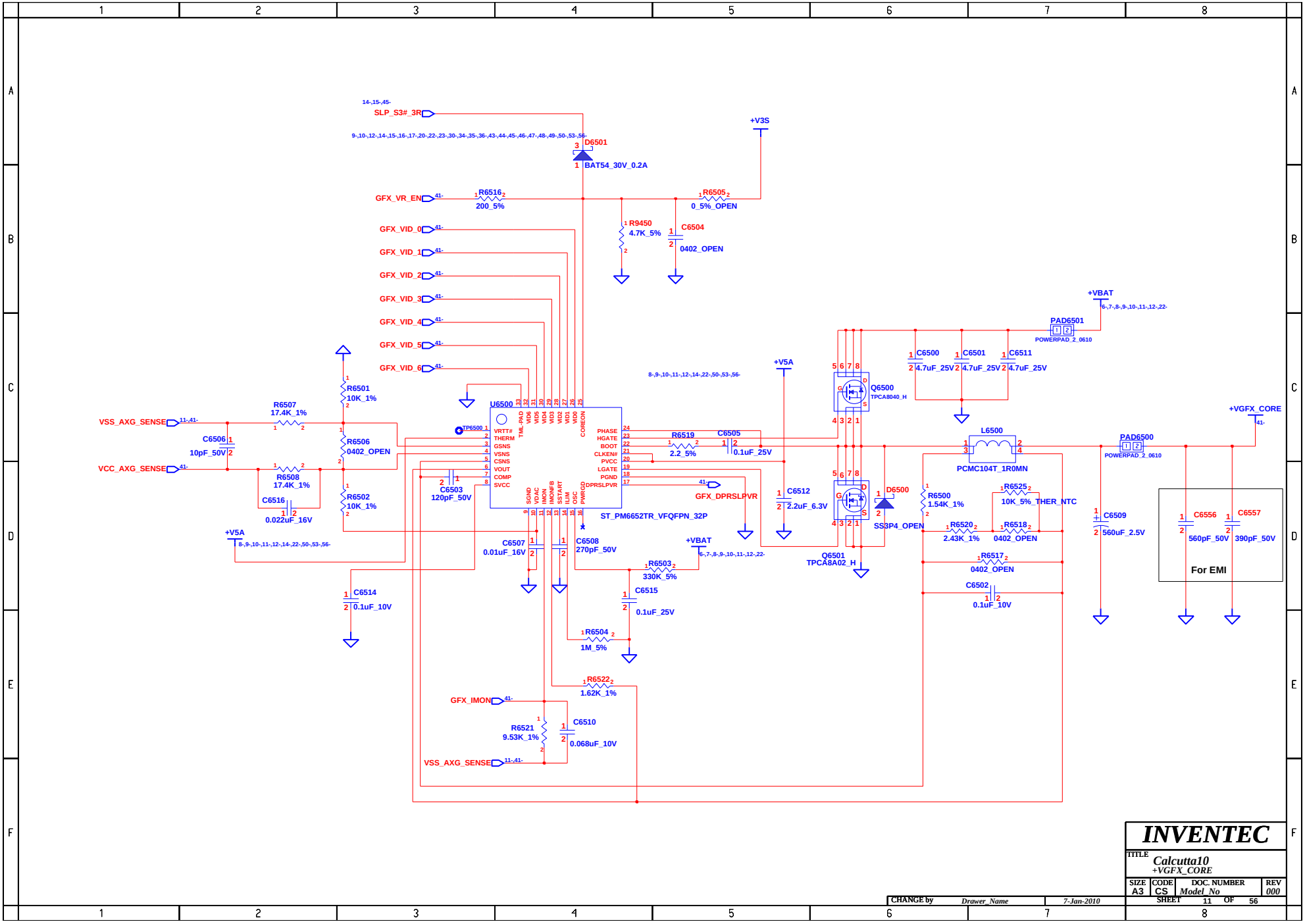

www.vinafix.vn

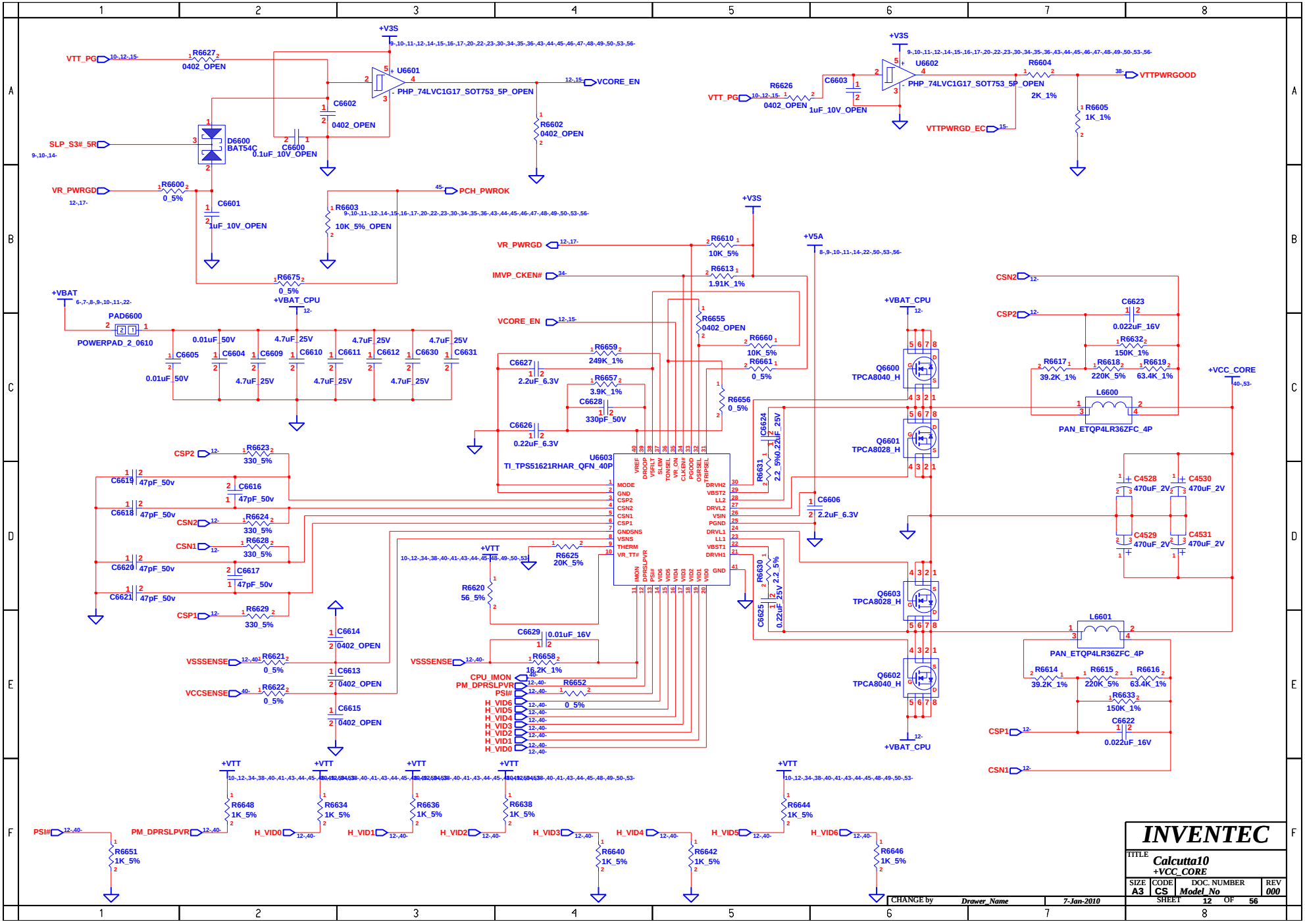

www.vinafix.vn

BLANK

INVENTEC			
TITLE Calcutta10			
SIZE A3	CODE CS	DOC. NUMBER Model_No	REV 000
CHANGE by Drawer_Name	7-Jan-2010	SHEET 13 OF 56	

www.vinafix.vn

+V5S +V3S +V1.5S +V1.5S_CPU

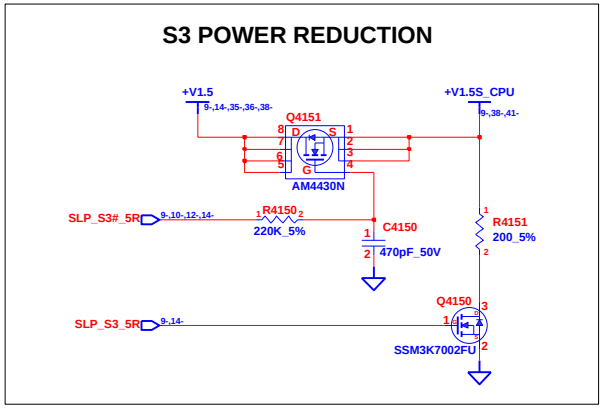

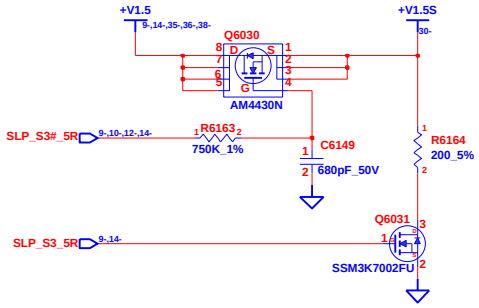

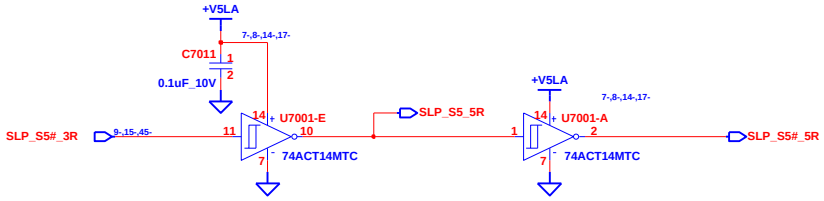

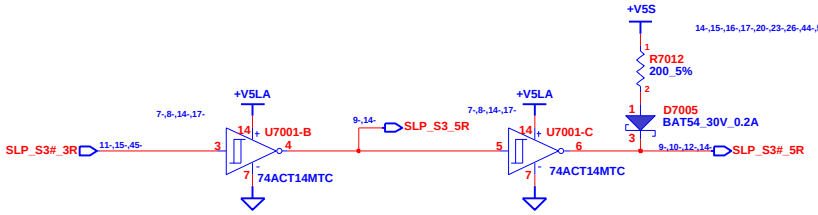

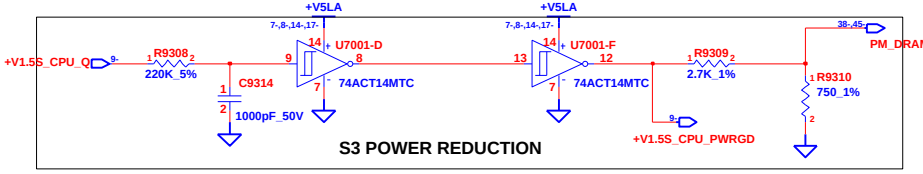

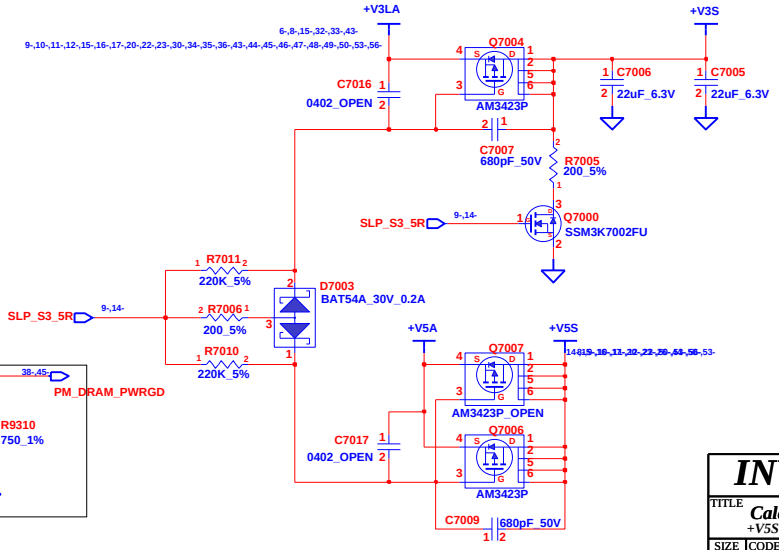

CHANGE by	Drawer_Name	7-Jan-2010

INVENTEC

TITLE: *Calcutta10* — *+V5S +V3S +V1.5S*

SIZE	CODE	DOC. NUMBER	REV
A3	CS	*Model_No*	*000*

SHEET 14 OF 56

www.vinafix.vn

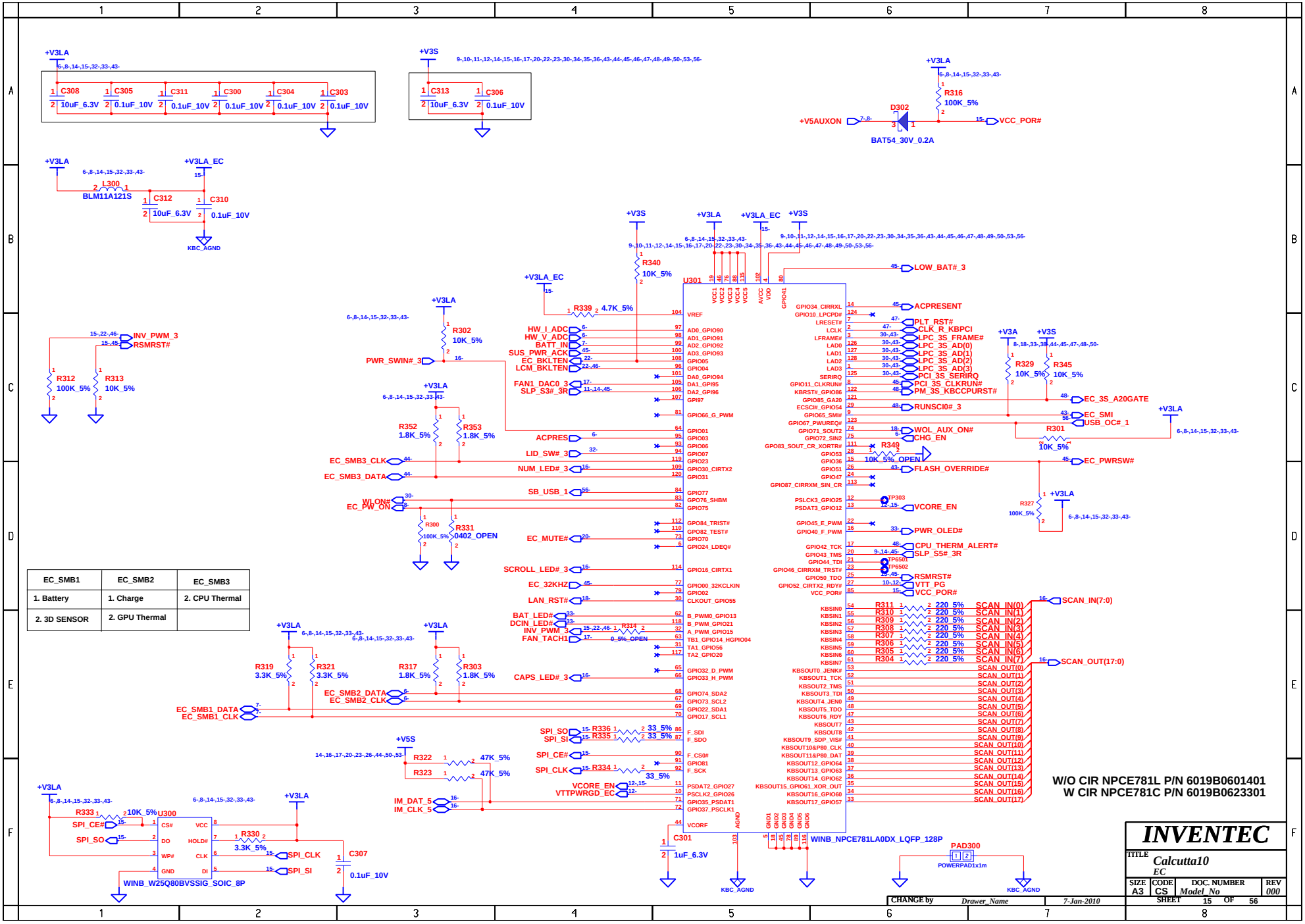

EC_SMB1	EC_SMB2	EC_SMB3
1. Battery	1. Charge	2. CPU Thermal
2. 3D SENSOR	2. GPU Thermal	

www.vinafix.vn

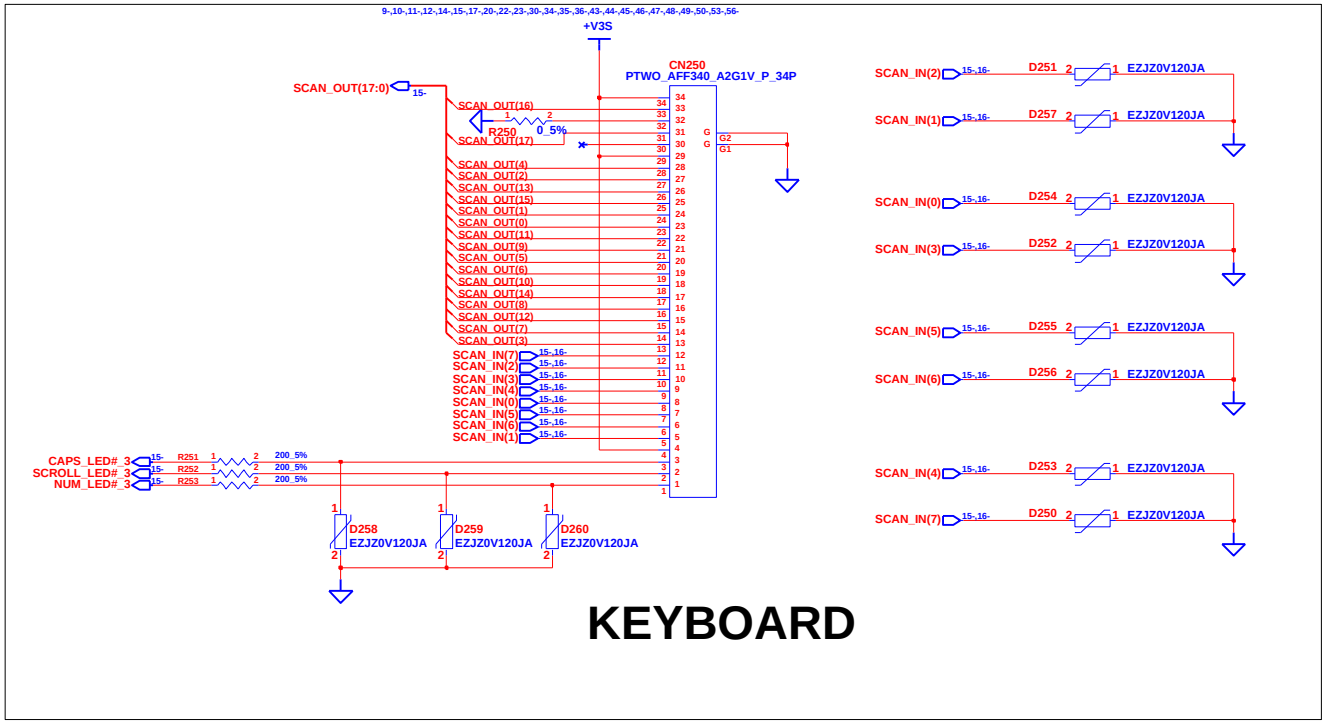

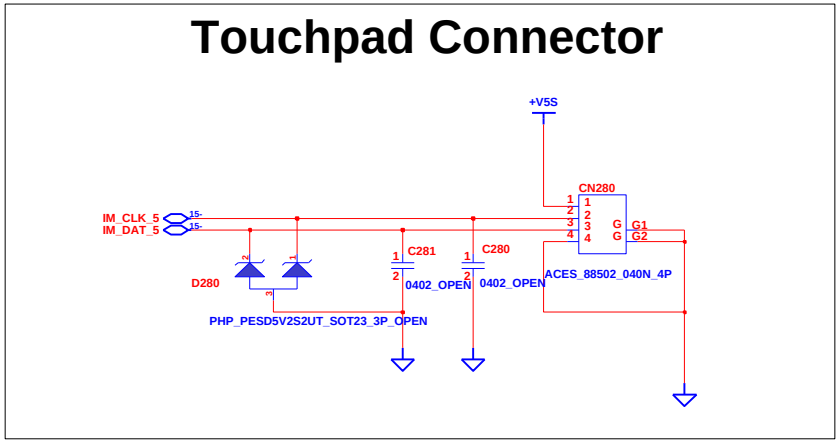

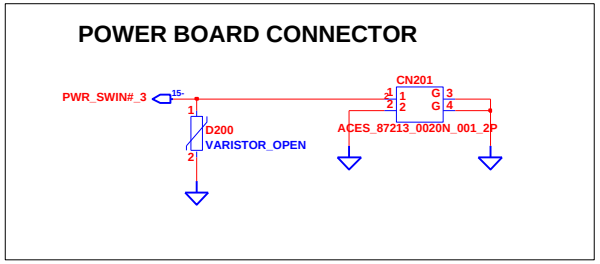

INVENTEC			
TITLE: Calcutta10 — Keyboard, Touch PAD			
SIZE: A3	CODE: CS	DOC. NUMBER: Model_No	REV: 000
CHANGE by: Drawer_Name	7-Jan-2010	SHEET 16 OF 56	

www.vinafix.vn

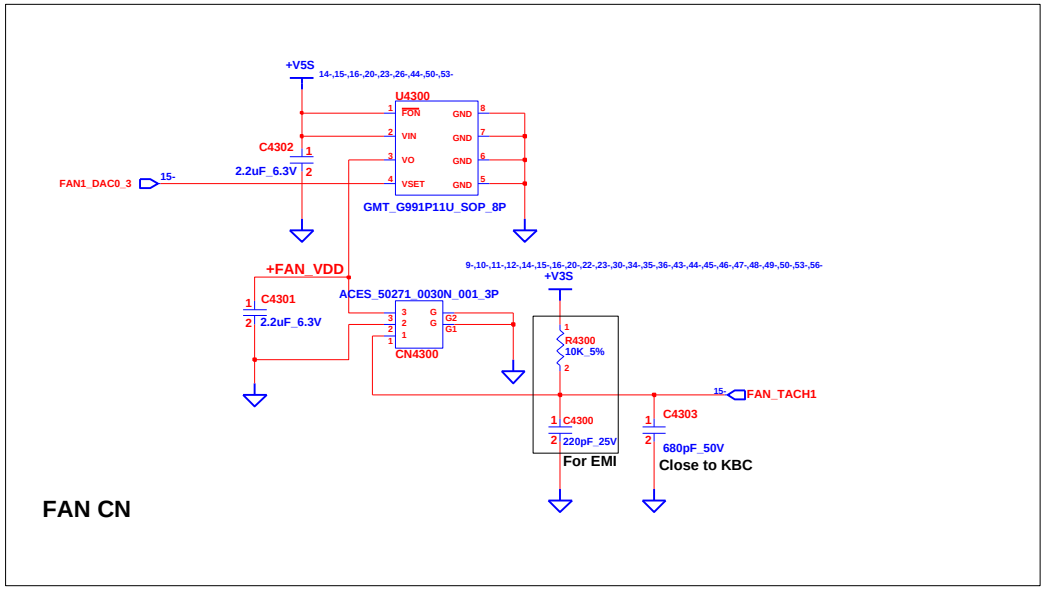

FAN CN

Board Thermal Sensor

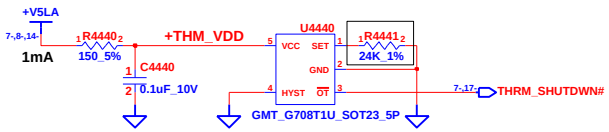

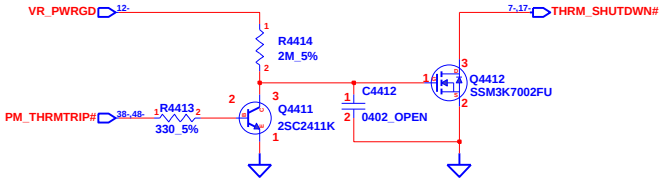

Thermal shoutdown at 85 C°+/-3 C°from 60 C°to 100 C°

RSET=0.0012*T^2- 0.9308*T+96.147
Hysteresis is 30C

INVENTEC			
TITLE: *Calcutta10* — *FAN, Thermal controller*			
SIZE: A3	CODE: CS	DOC. NUMBER: *Model_No*	REV: *000*
CHANGE by: *Drawer_Name*	*7-Jan-2010*	SHEET 17 OF 56	

www.vinafix.vn

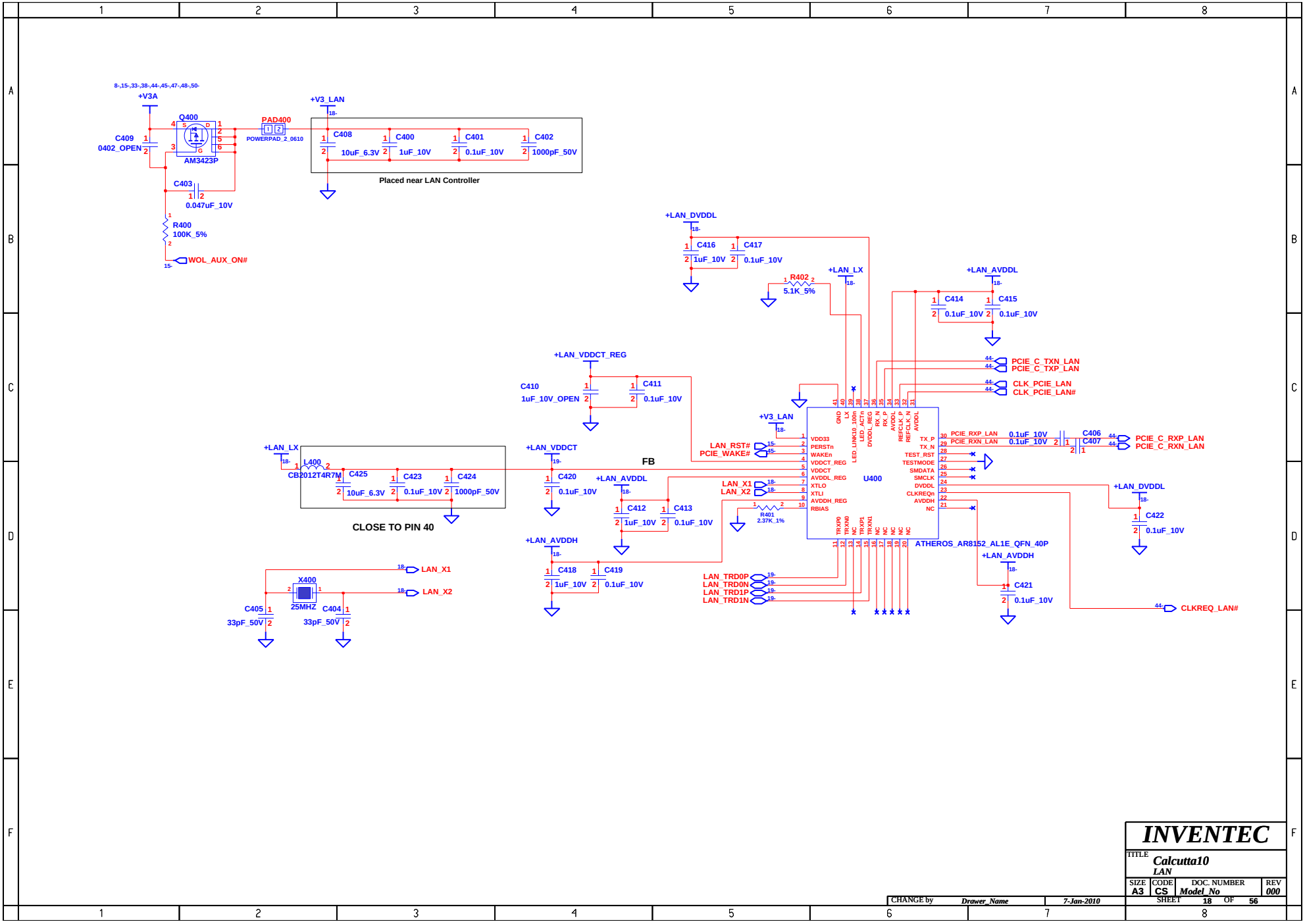

www.vinafix.vn

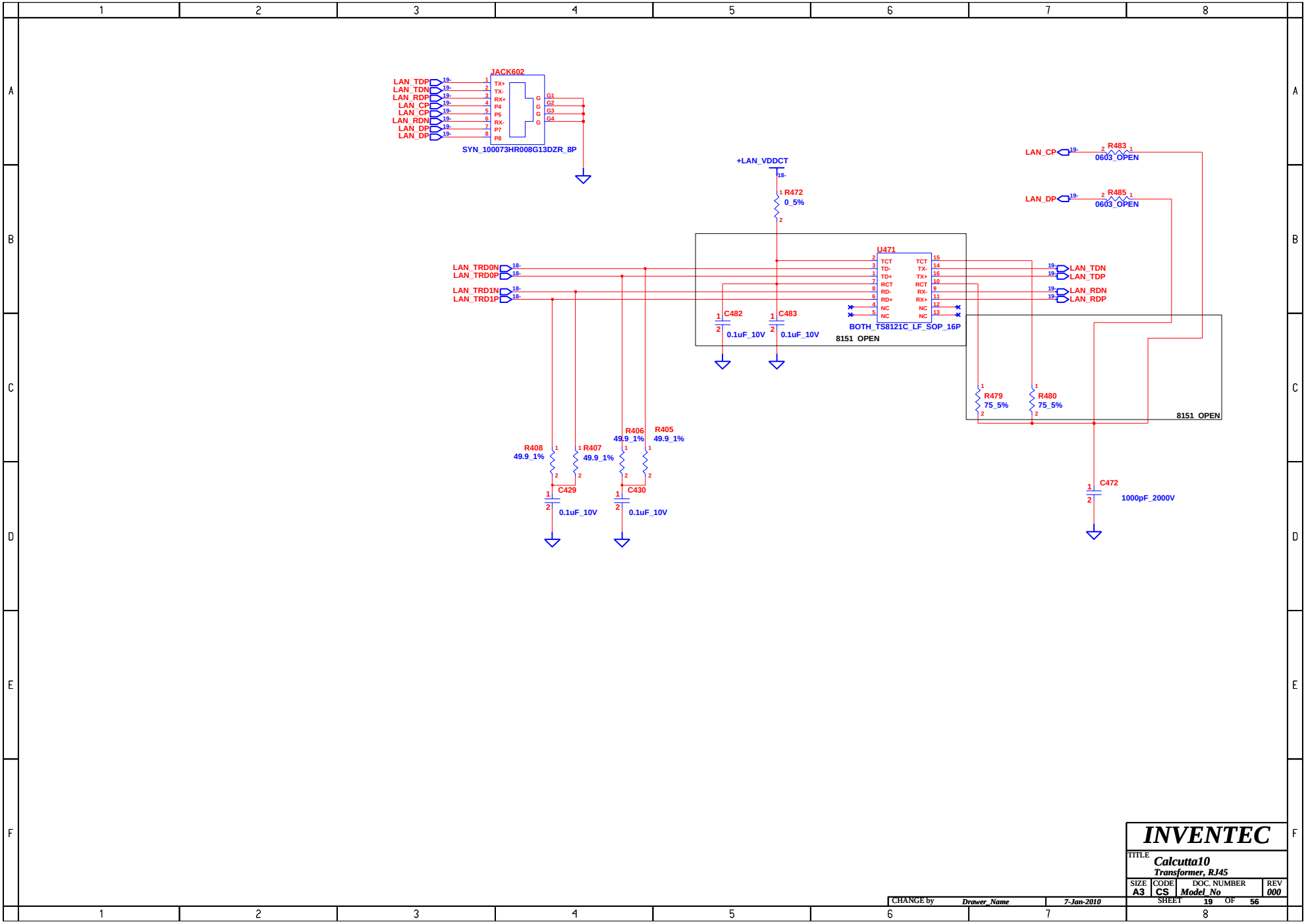

CHANGE by	Drawer_Name	7-Jan-2010	

INVENTEC

TITLE *Calcutta10*
Transformer, RJ45

SIZE	CODE	DOC. NUMBER	REV
A3	CS	Model_No	000

SHEET 19 OF 56

www.vinafix.vn

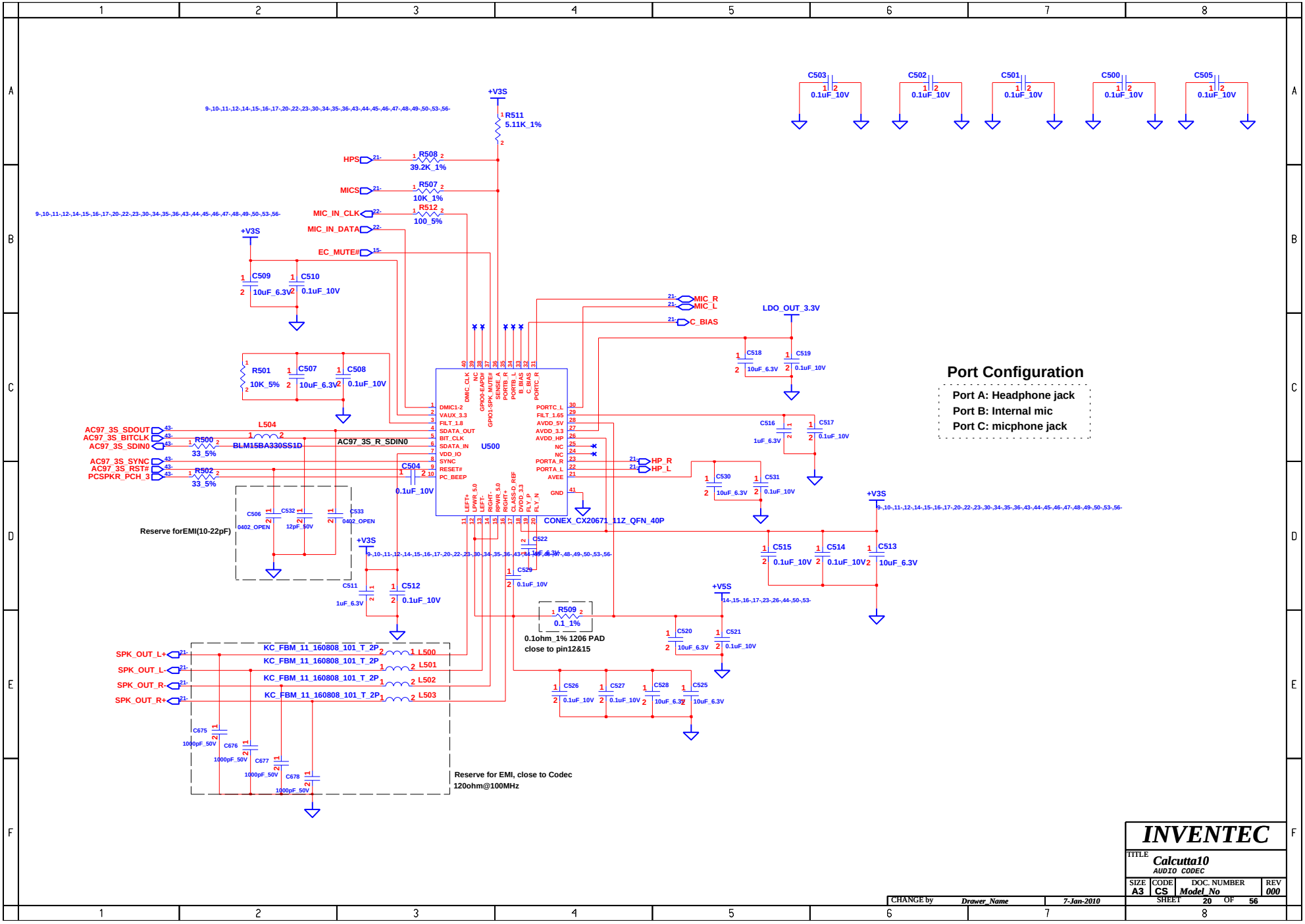

www.vinafix.vn

INTERNAL SPEAKERS

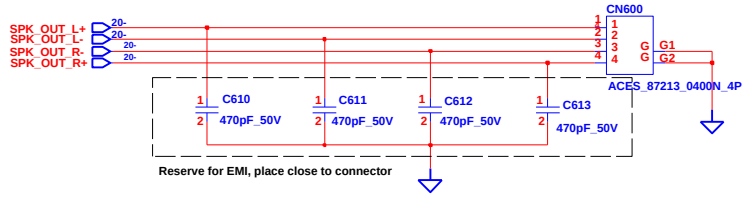

AUDIO JACKS

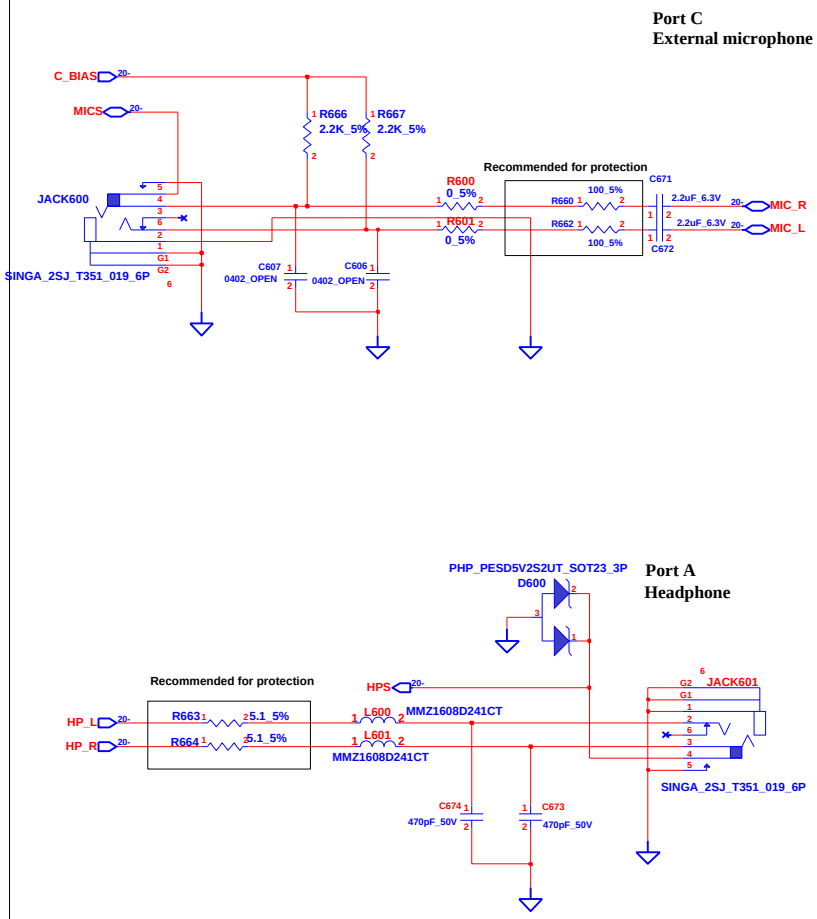

INVENTEC			
TITLE Calcutta10 AUDIO JACK			
SIZE A3	CODE CS	DOC. NUMBER Model_No	REV 000
CHANGE by Drawer_Name	7-Jan-2010	SHEET 21 OF 56	

www.vinafix.vn

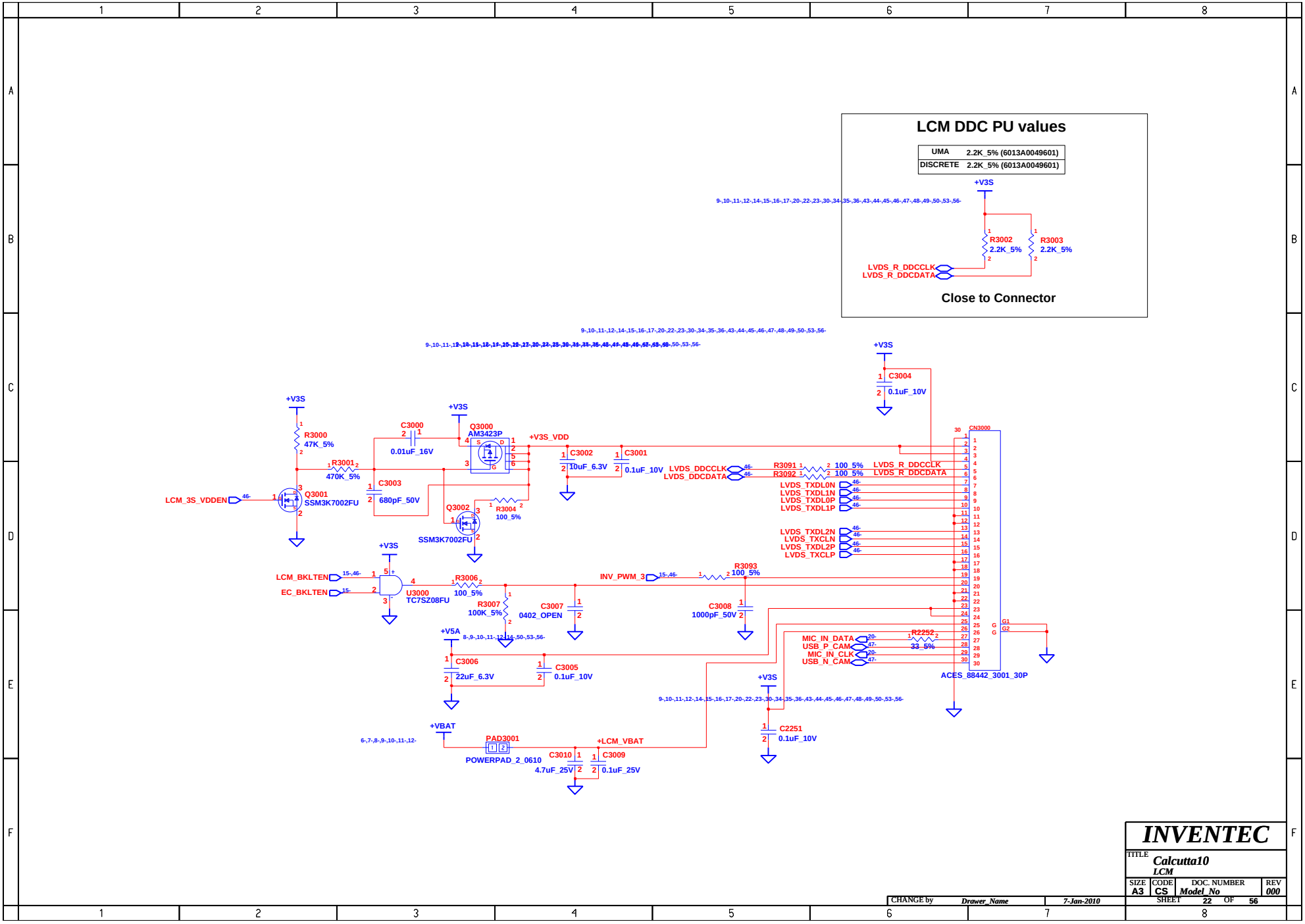

www.vinafix.vn

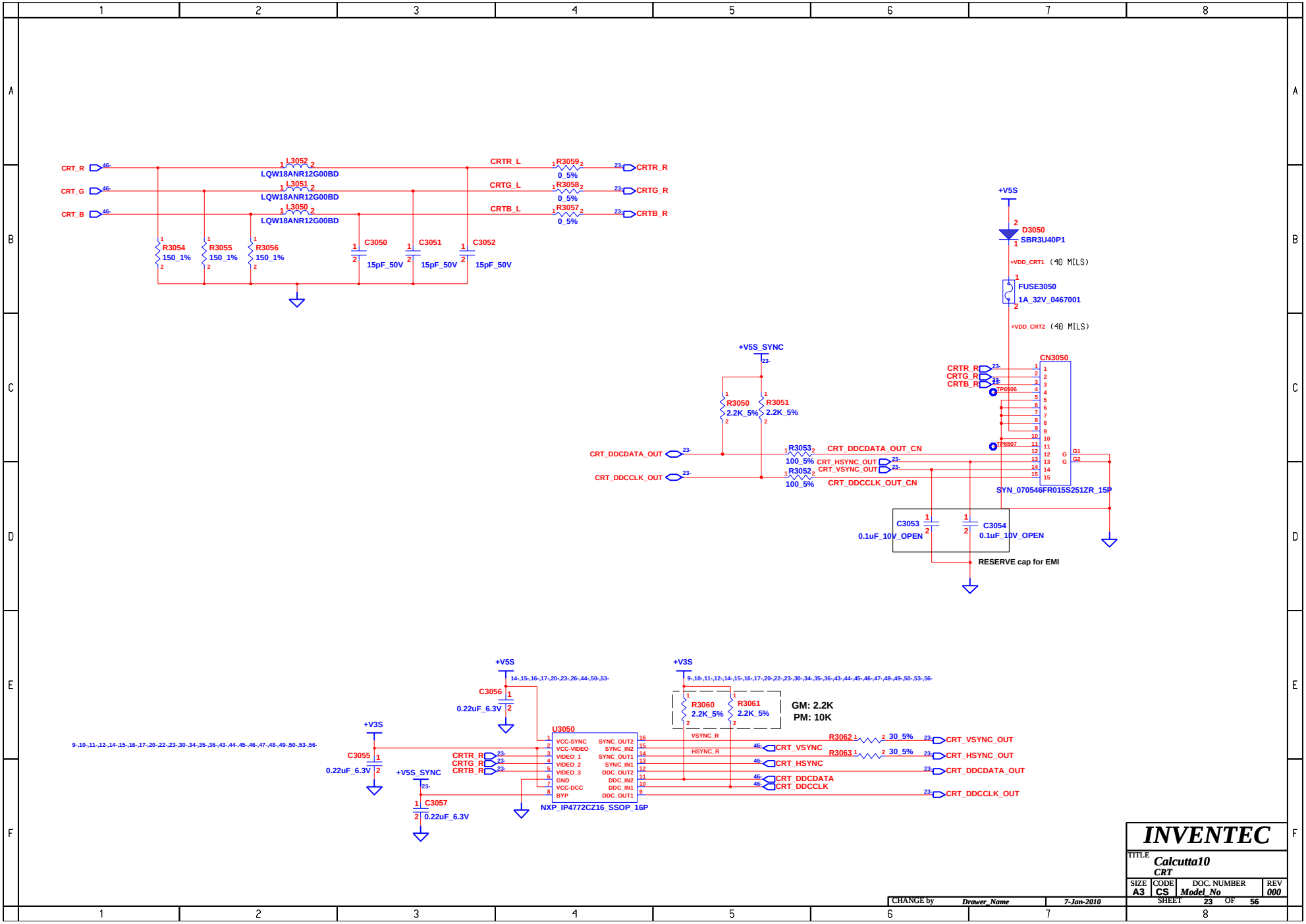

INVENTEC

TITLE Calcutta10 CRT

SIZE	CODE	DOC. NUMBER	REV
A3	CS	Model_No	000

CHANGE by Drawer_Name 7-Jan-2010 SHEET 23 OF 56

www.vinafix.vn

BLANK

INVENTEC			
TITLE Calcutta10 HDMI LEVEL SHIFTER			
SIZE A3	CODE CS	DOC. NUMBER Model_No	REV 000
CHANGE by Drawer_Name	7-Jan-2010	SHEET 24 OF 56	

www.vinafix.vn

BLANK

INVENTEC			
TITLE Calcutta10 HDMI			
SIZE A3	CODE CS	DOC. NUMBER Model_No	REV 000
CHANGE by Drawer_Name	7-Jan-2010	SHEET 25 OF 56	

www.vinafix.vn

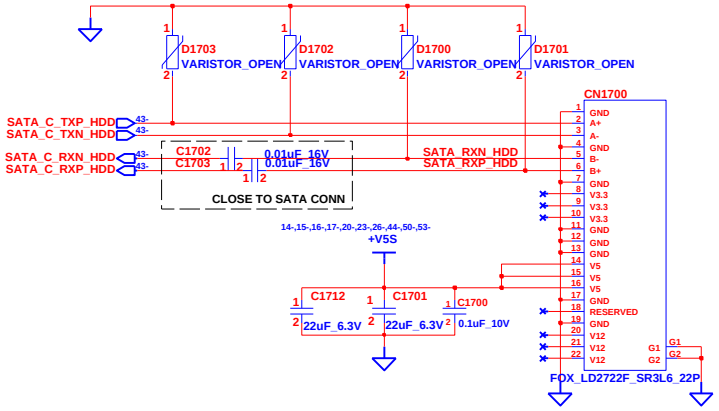

SATA HDD

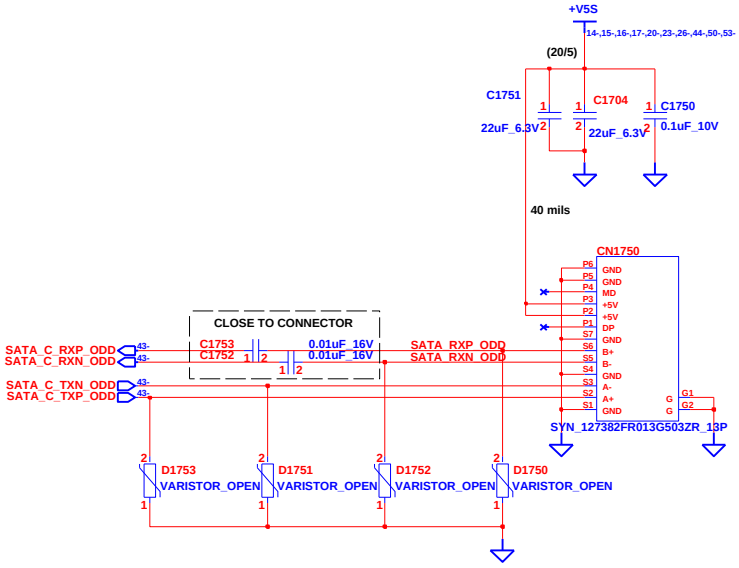

SATA ODD

INVENTEC			
TITLE Calcutta10 SATA HDD, SATA ODD			
SIZE A3	CODE CS	DOC. NUMBER Model_No	REV 000
CHANGE by Drawer_Name	7-Jan-2010	SHEET 26 OF 56	

www.vinafix.vn

BLANK

INVENTEC			
TITLE Calcutta10 CARD READER & USB CNTR			
SIZE A3	CODE CS	DOC. NUMBER Model_No	REV 000
CHANGE by Drawer_Name	7-Jan-2010	SHEET 27 OF 56	

www.vinafix.vn

BLANK

INVENTEC			
TITLE Calcutta10 USB & eSATA COMBO			
SIZE A3	CODE CS	DOC. NUMBER Model_No	REV 000
CHANGE by Drawer_Name	7-Jan-2010	SHEET 28 OF 56	

www.vinafix.vn

BLANK

INVENTEC			
TITLE Calcutta10 BlueTooth			
SIZE A3	CODE CS	DOC. NUMBER Model_No	REV 000
CHANGE by Drawer_Name	7-Jan-2010	SHEET 29 OF 56	

www.vinafix.vn

Wireless & Debug card

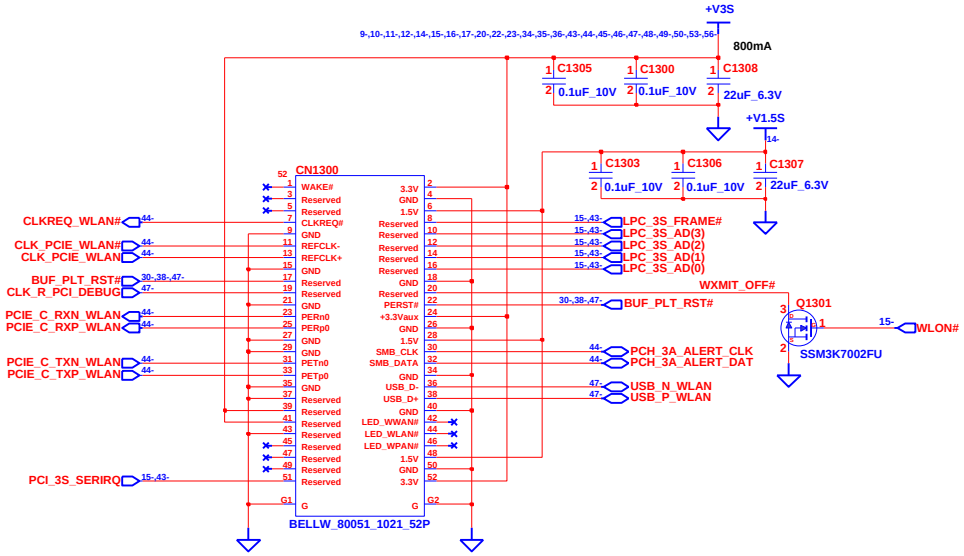

INVENTEC			
TITLE Calcutta10 WLAN			
SIZE A3	CODE CS	DOC. NUMBER Model_No	REV 000
CHANGE by Drawer_Name	7-Jan-2010	SHEET 30 OF 56	

www.vinafix.vn

BLANK

INVENTEC				
TITLE Calcutta10 3G				
SIZE A3	CODE CS	DOC. NUMBER Model_No		REV 000
CHANGE by Drawer_Name	7-Jan-2010	SHEET 31 OF 56		

www.vinafix.vn

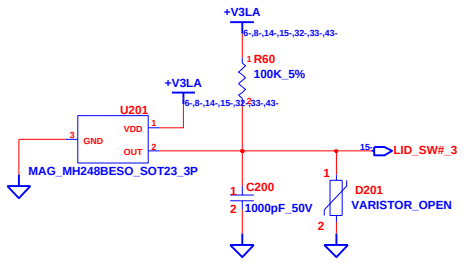

HALL SENSOR

CHANGE by	Drawer_Name	7-Jan-2010	

INVENTEC

TITLE *Calcutta10*
Hall Sensor

SIZE	CODE	DOC. NUMBER	REV
A3	CS	*Model_No*	*000*

SHEET 32 OF 56

www.vinafix.vn

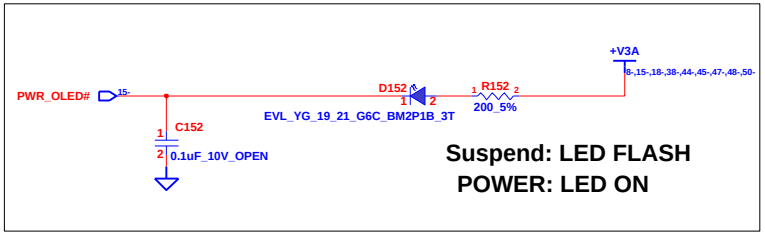

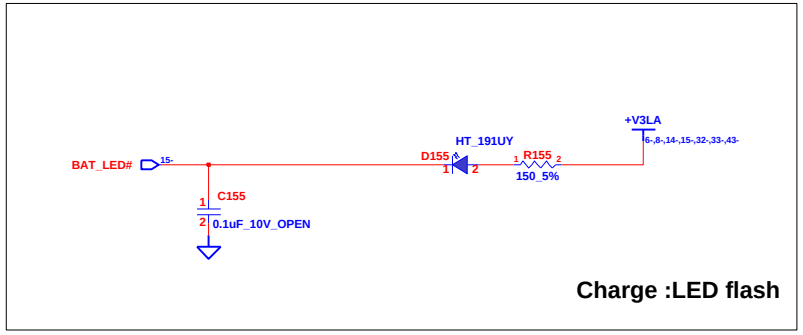

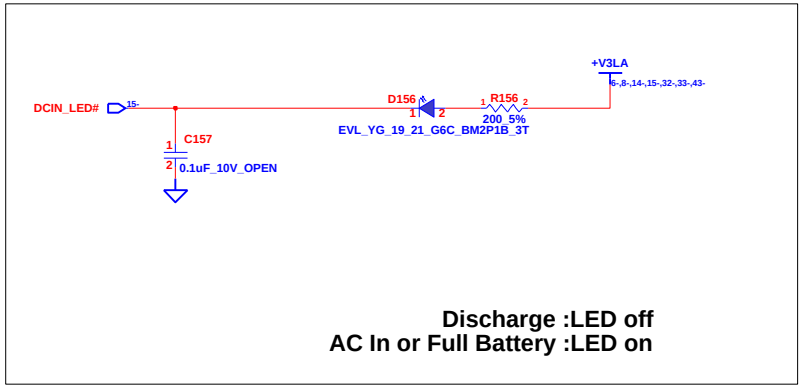

CHANGE by	Drawer_Name	7-Jan-2010	

INVENTEC

TITLE *Calcutta10*
LED

SIZE	CODE	DOC. NUMBER	REV
A3	CS	Model_No	000

SHEET 33 OF 56

www.vinafix.vn

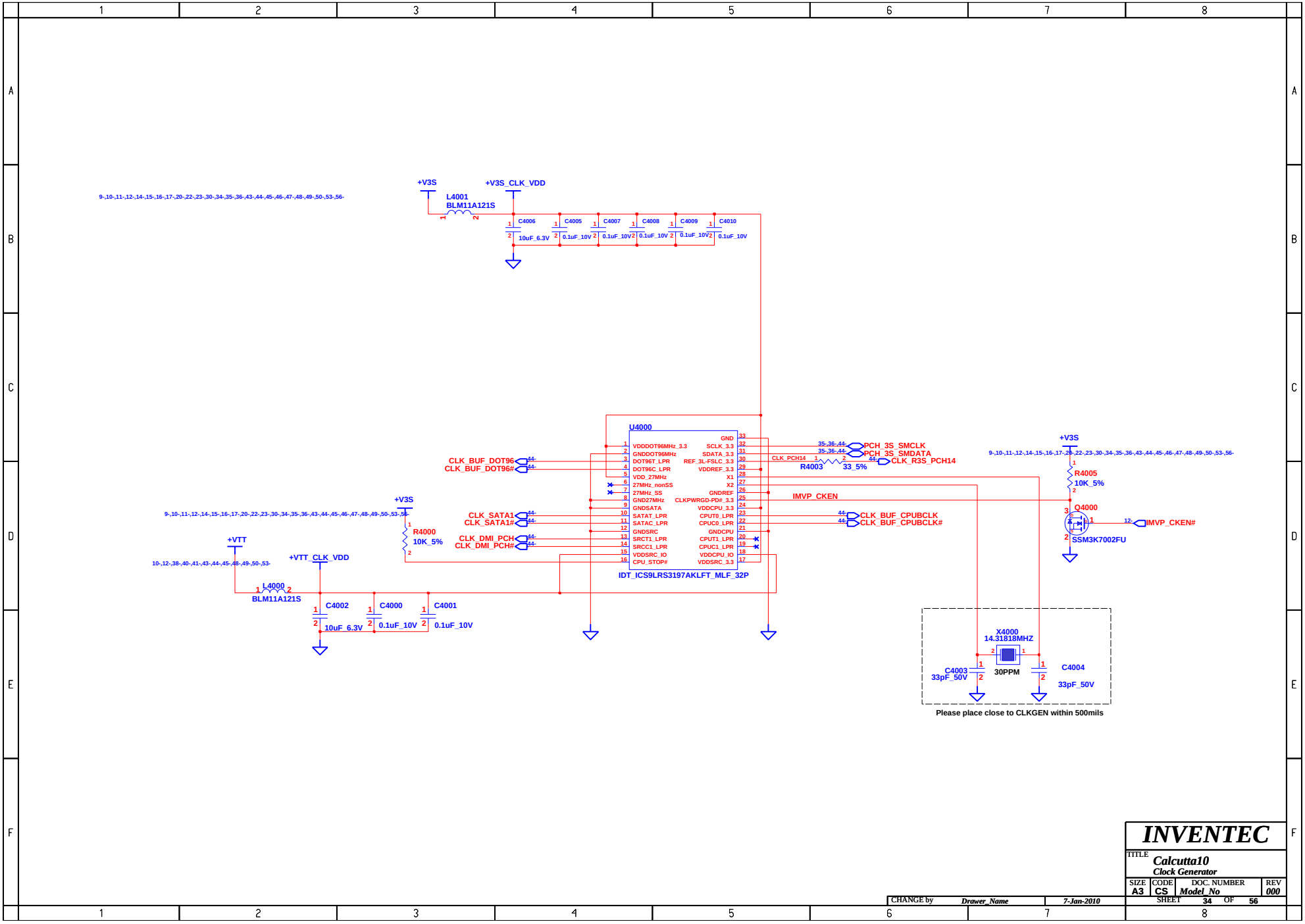

www.vinafix.vn

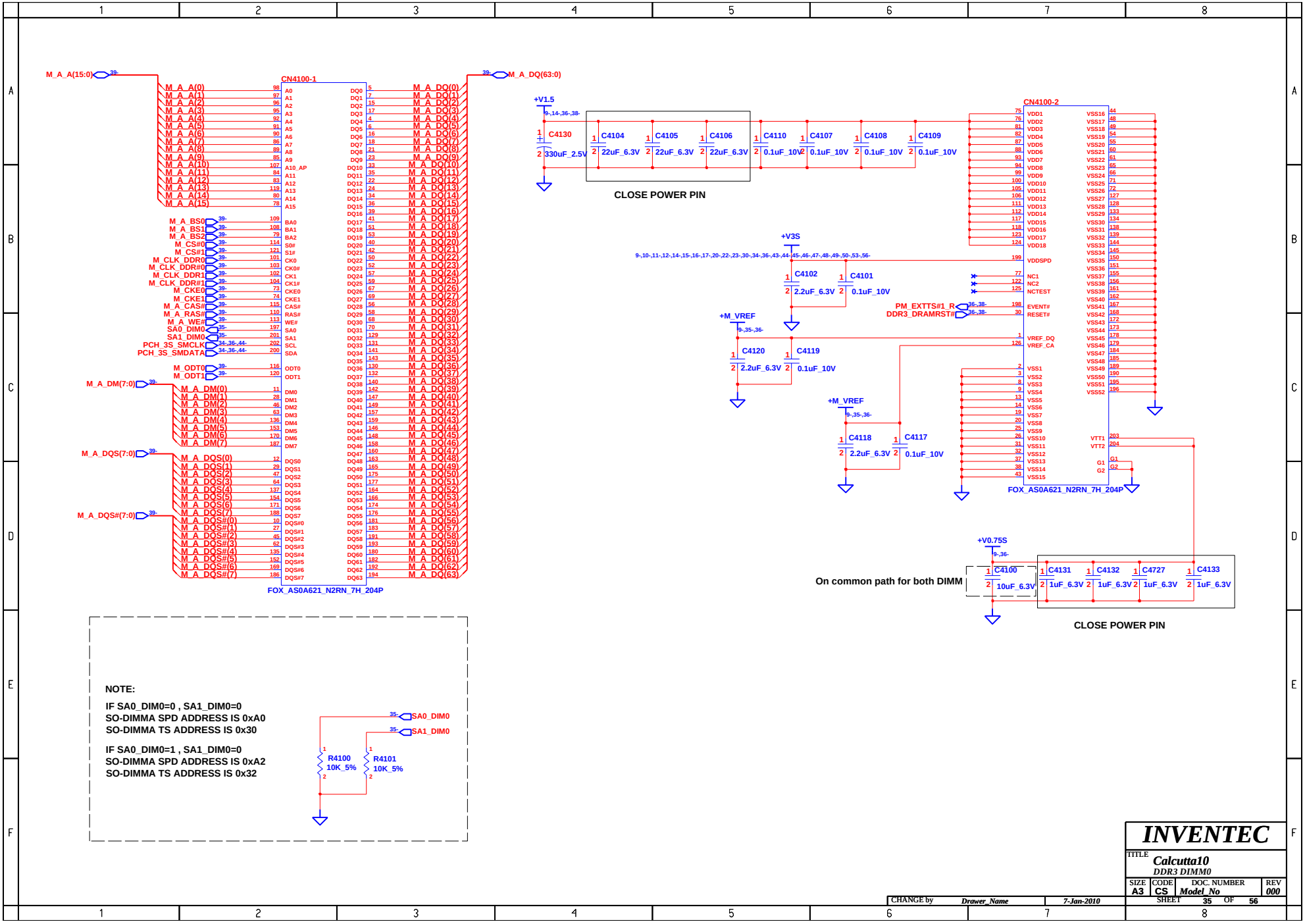

www.vinafix.vn

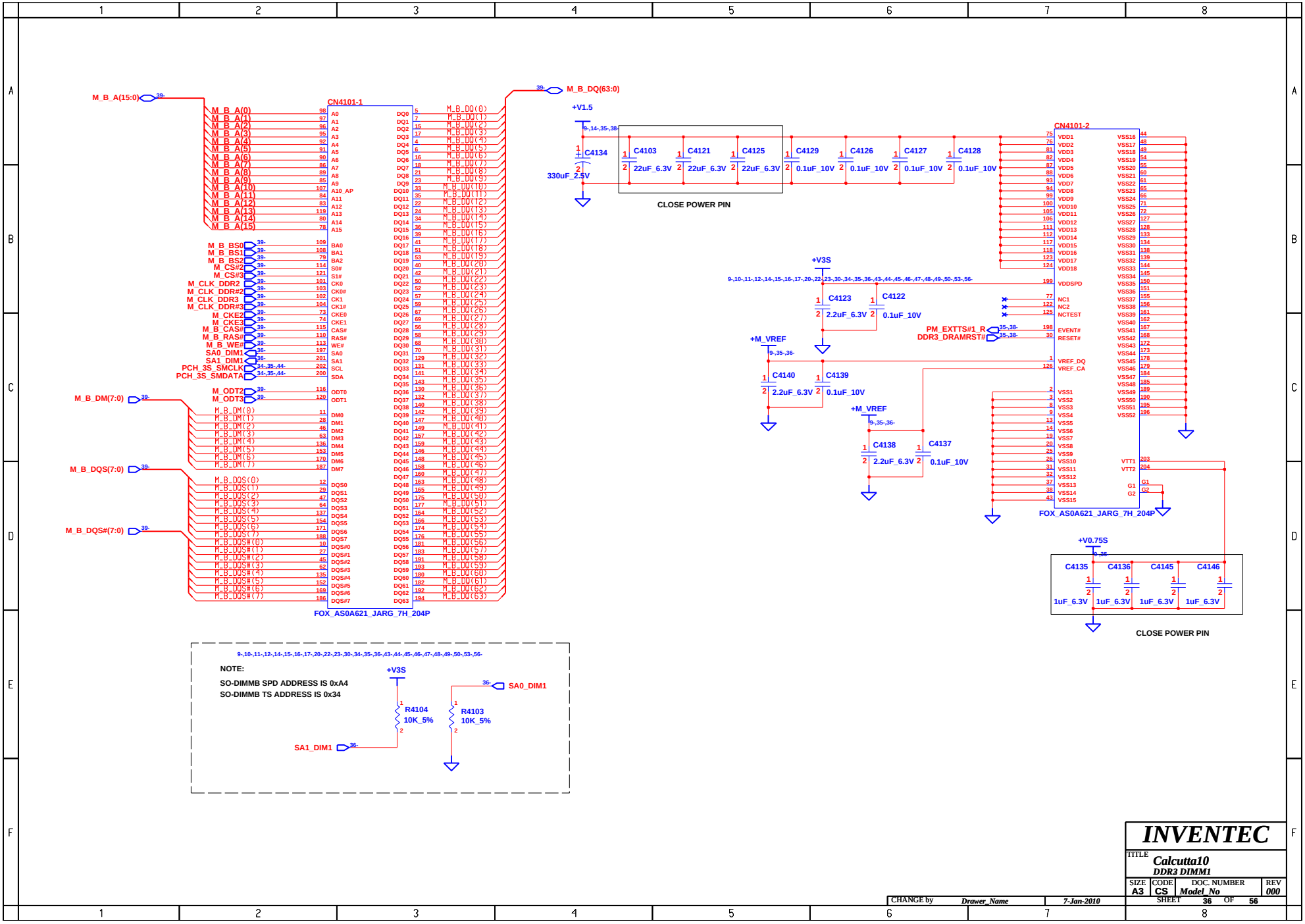

CHANGE by	Drawer_Name	7-Jan-2010	

INVENTEC

TITLE: *Calcutta10*
DDR3 DIMM1

SIZE	CODE	DOC. NUMBER	REV
A3	CS	Model_No	000

SHEET 36 OF 56

www.vinafix.vn

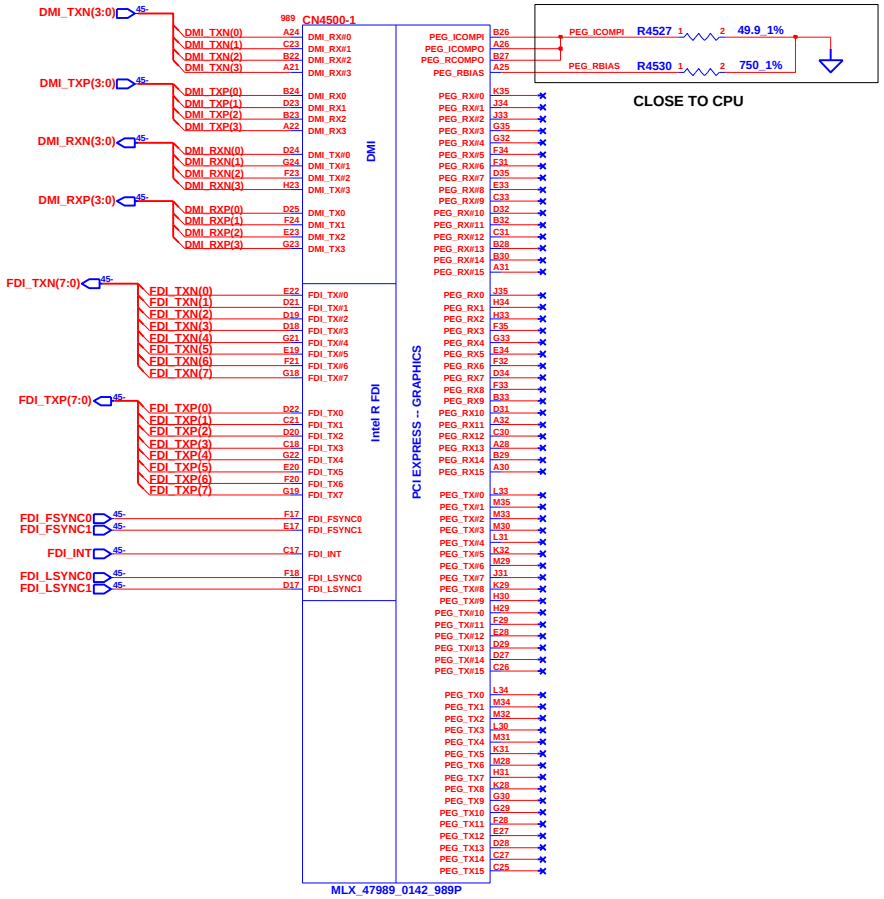

INVENTEC			
TITLE Calcutta10 CPU-1			
SIZE A3	CODE CS	DOC. NUMBER Model_No	REV 000
CHANGE by Drawer_Name	7-Jan-2010	SHEET 37 OF 56	

www.vinafix.vn

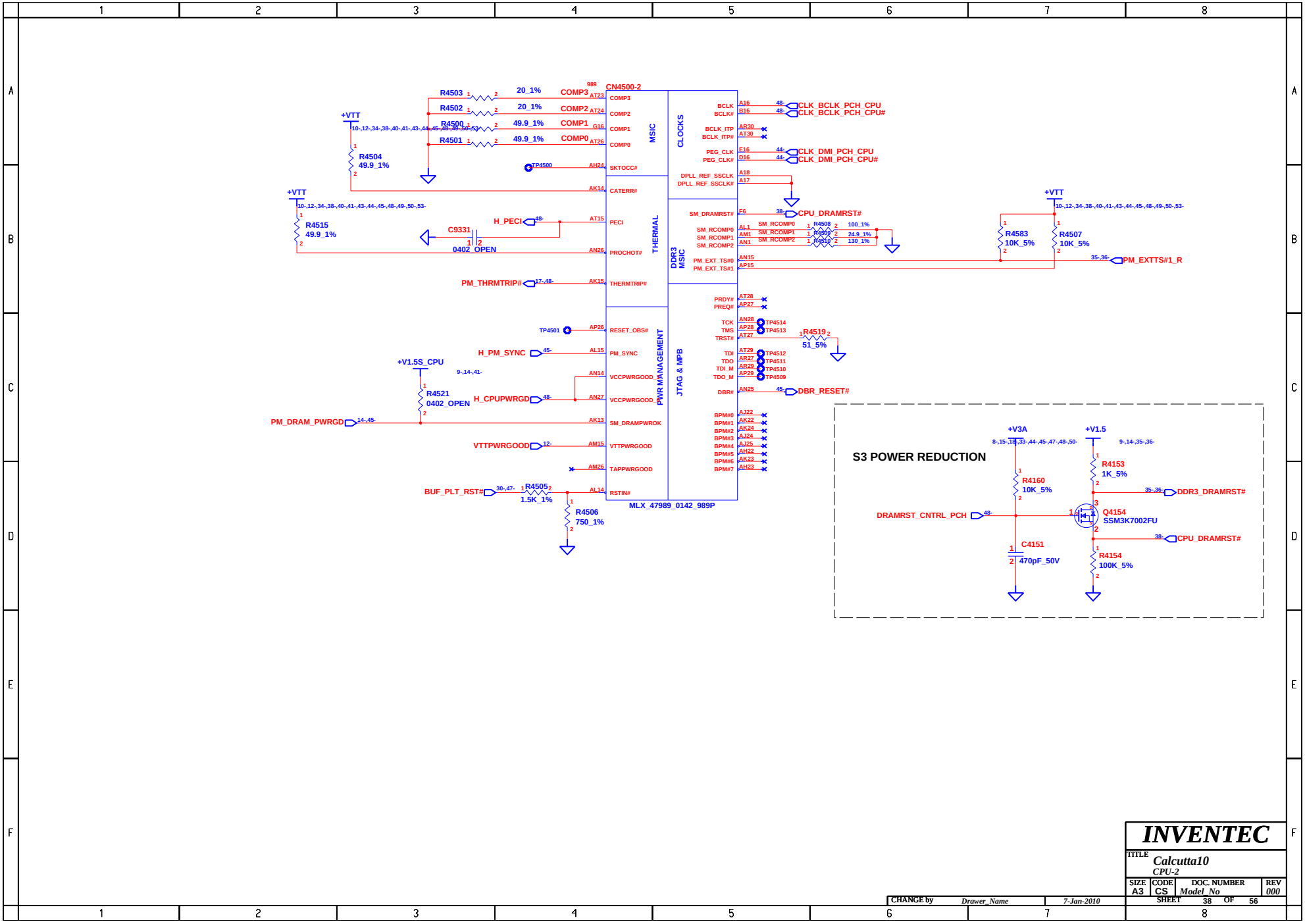

www.vinafix.vn

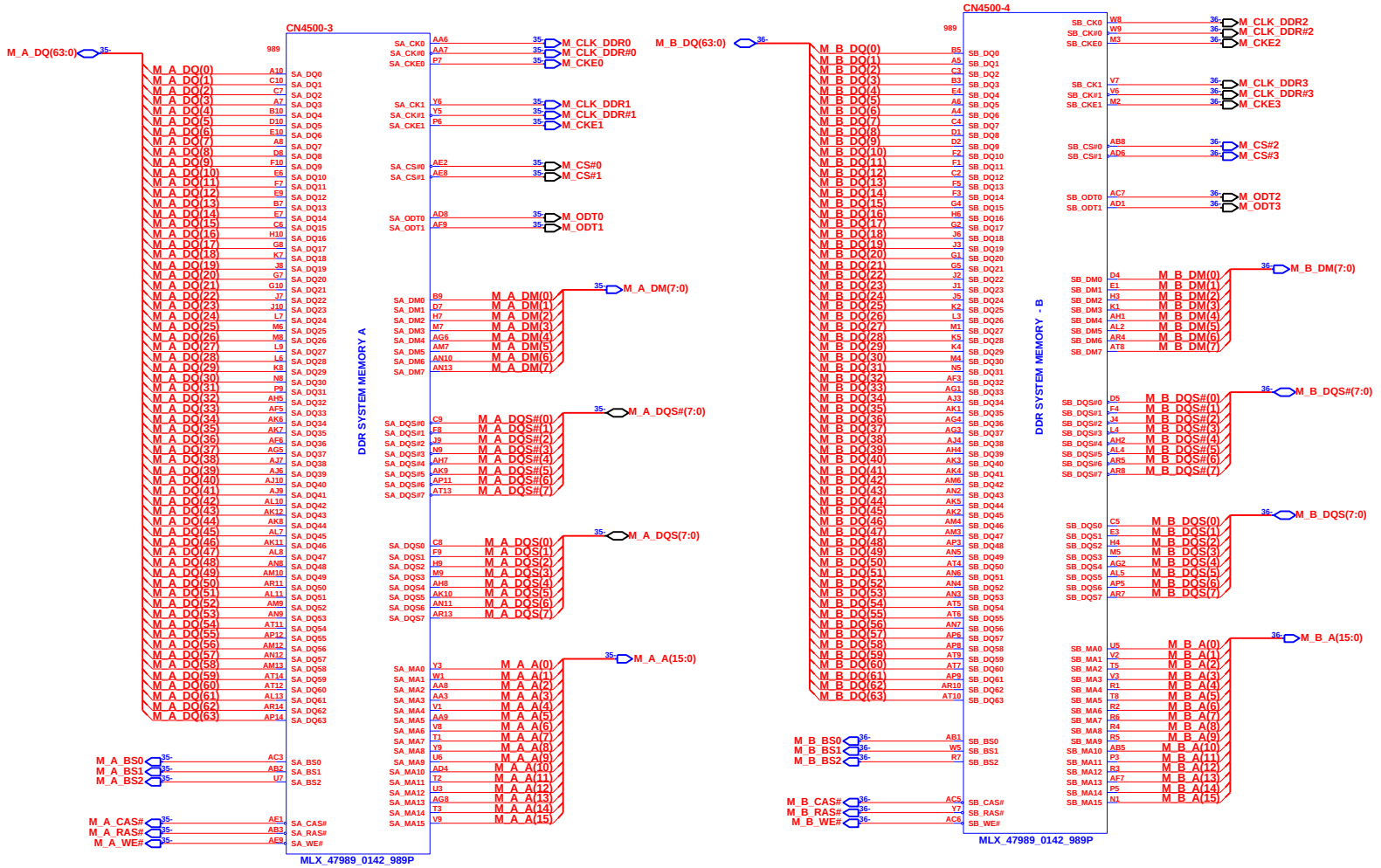

INVENTEC			
TITLE Calcutta10 CPU-3			
SIZE A3	CODE CS	DOC. NUMBER Model_No	REV 000
CHANGE by Drawer_Name	2-Mar-2010	SHEET 39 OF 56	

www.vinafix.vn

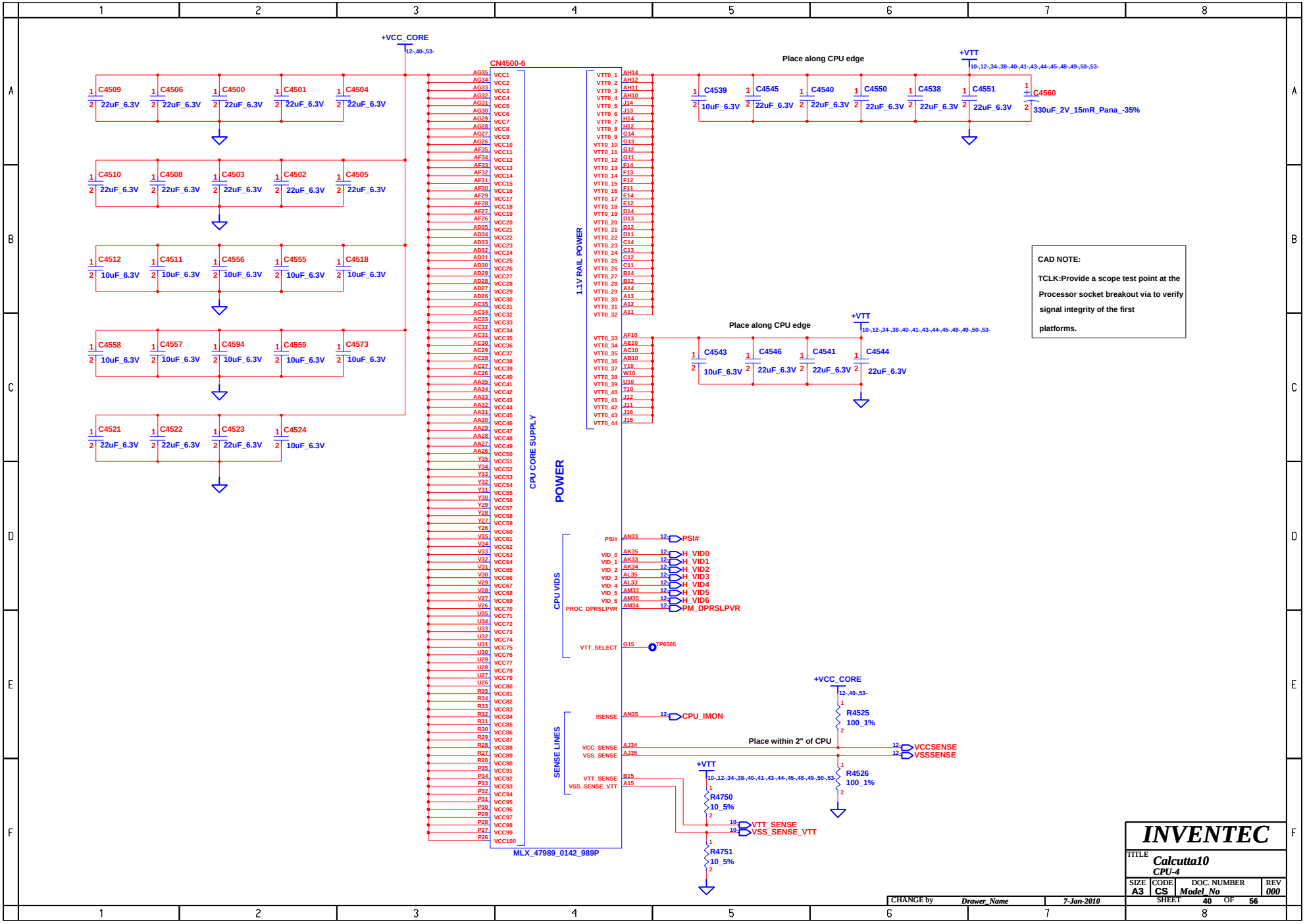

www.vinafix.vn

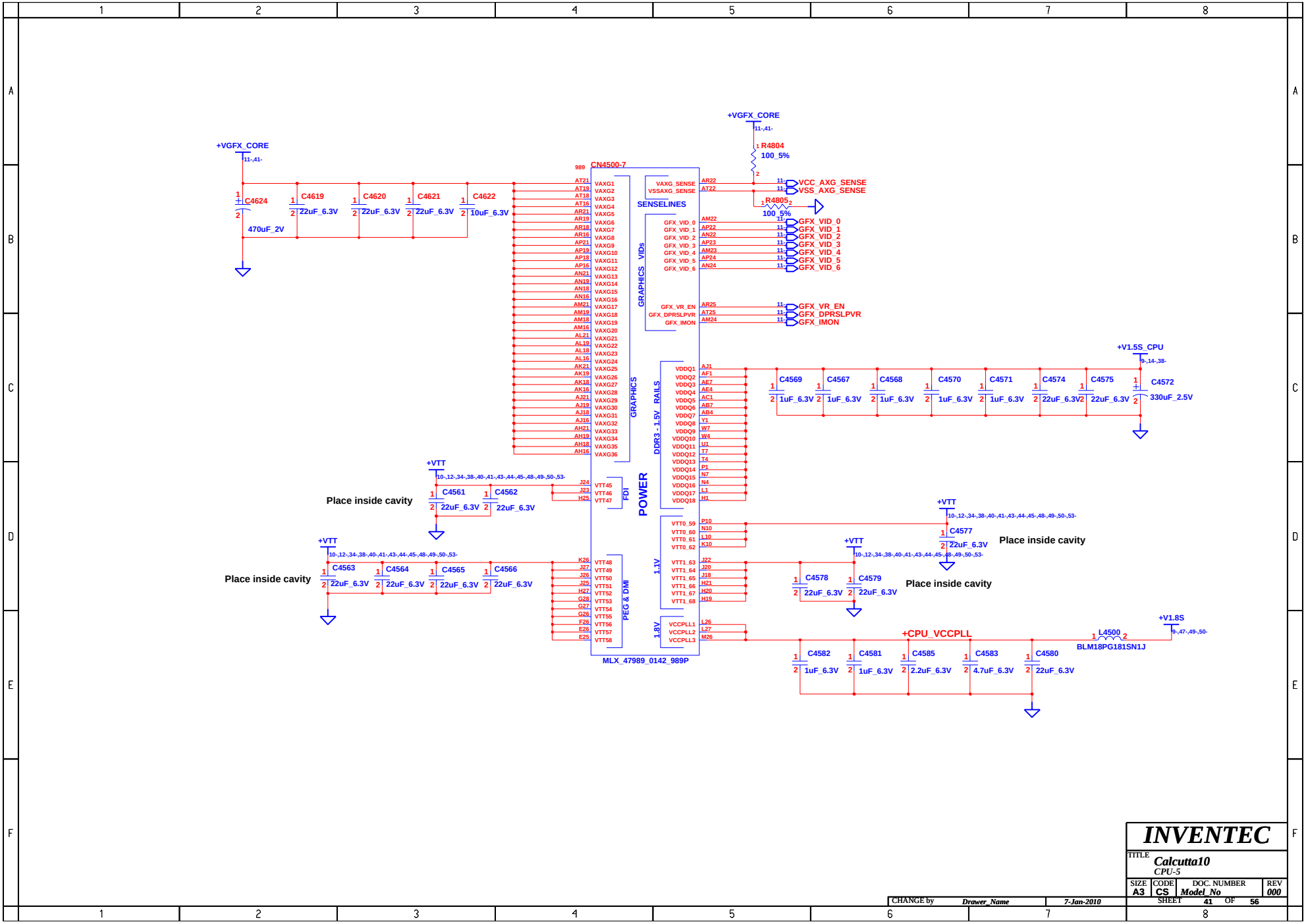

www.vinafix.vn

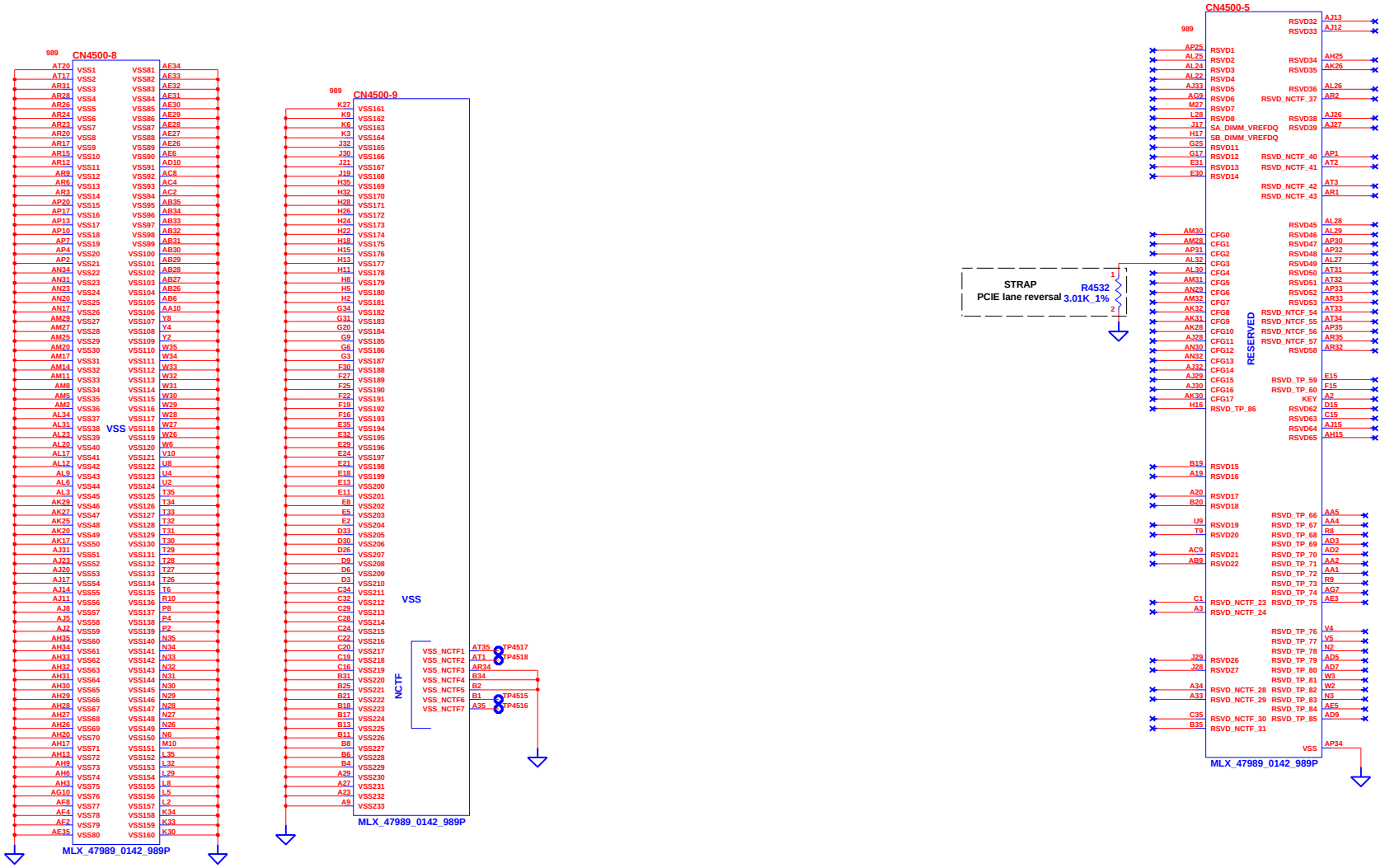

CHANGE by	Drawer_Name	7-Jan-2010	

INVENTEC

TITLE: Calcutta10
CPU-6

SIZE	CODE	DOC. NUMBER	REV
A3	CS	Model_No	000

SHEET 42 OF 56

www.vinafix.vn

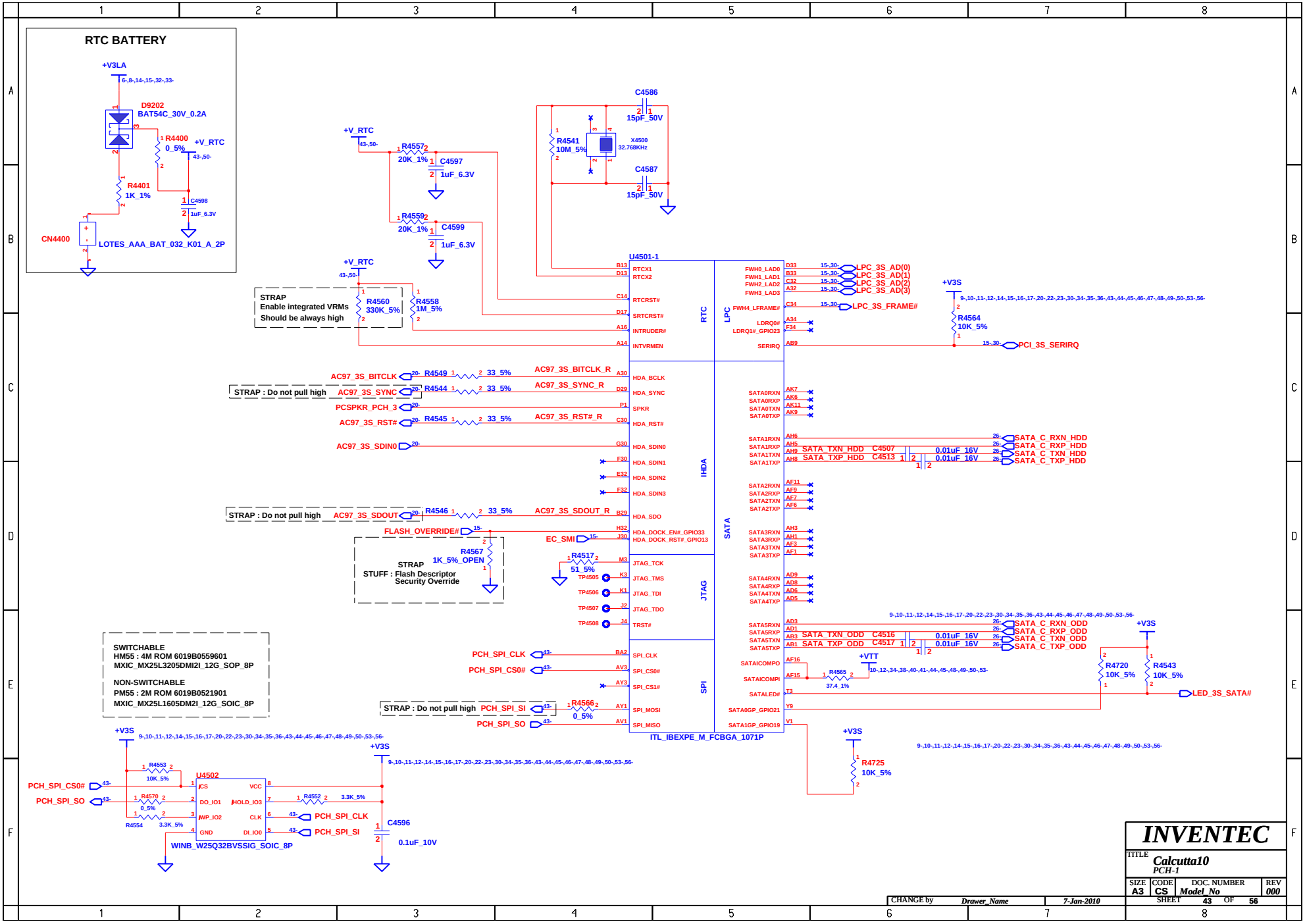

www.vinafix.vn

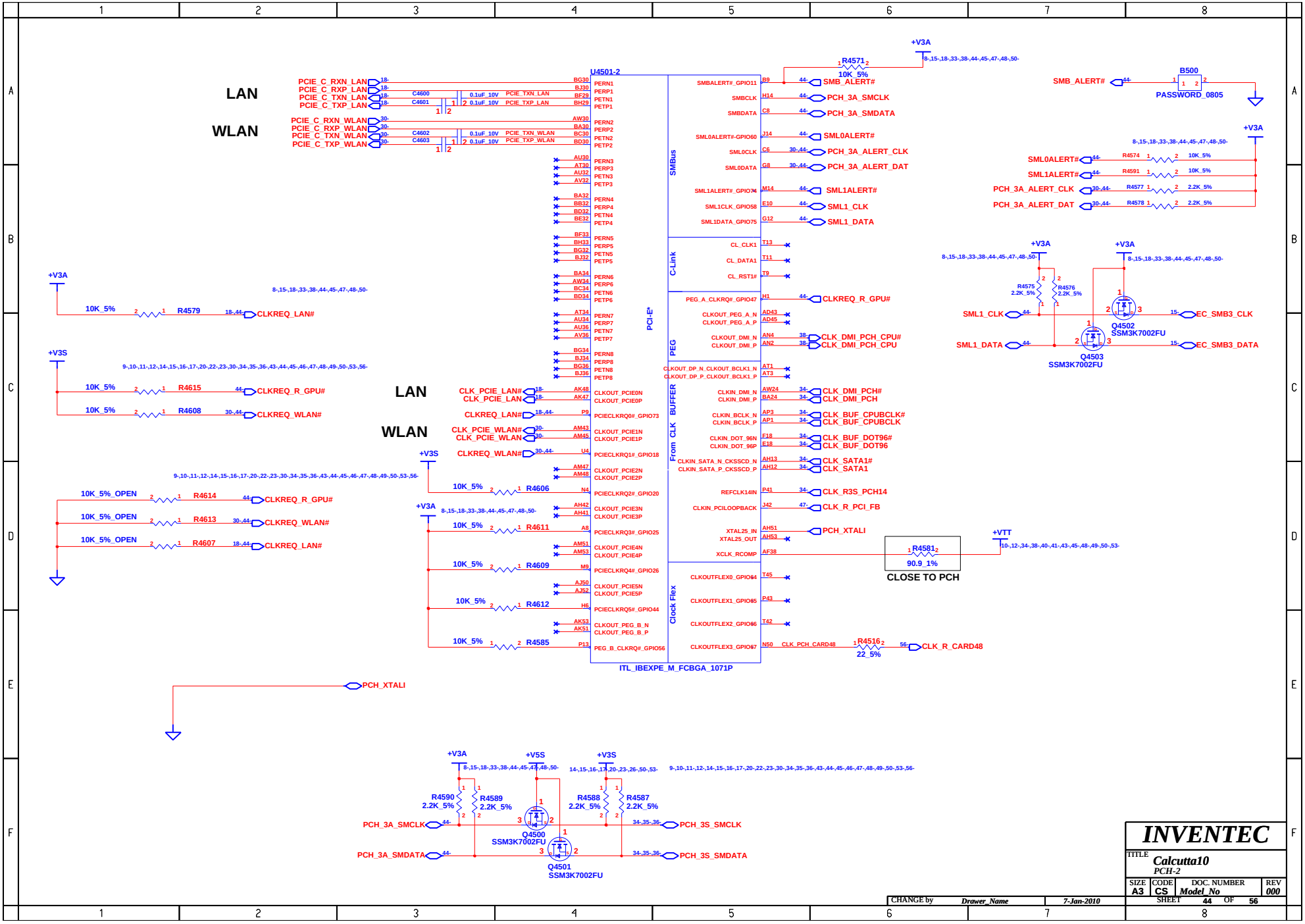

CHANGE by	Drawer_Name	7-Jan-2010	

INVENTEC

TITLE: Calcutta10
PCH-2

SIZE	CODE	DOC. NUMBER	REV
A3	CS	Model_No	000

SHEET 44 OF 56

www.vinafix.vn

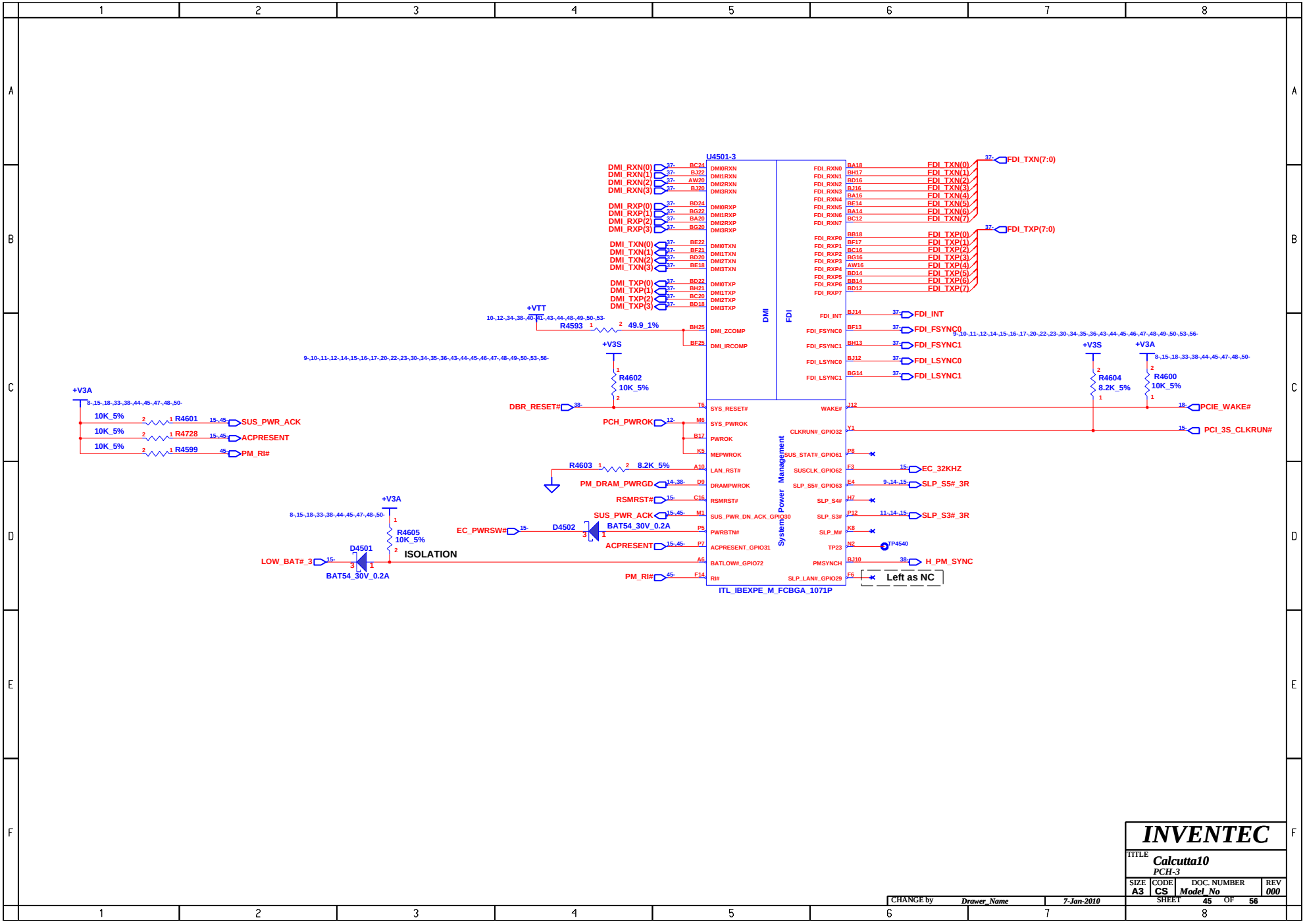

INVENTEC			
TITLE Calcutta10 PCH-3			
SIZE A3	CODE CS	DOC. NUMBER Model_No	REV 000
CHANGE by Drawer_Name	7-Jan-2010	SHEET 45 OF 56	

www.vinafix.vn

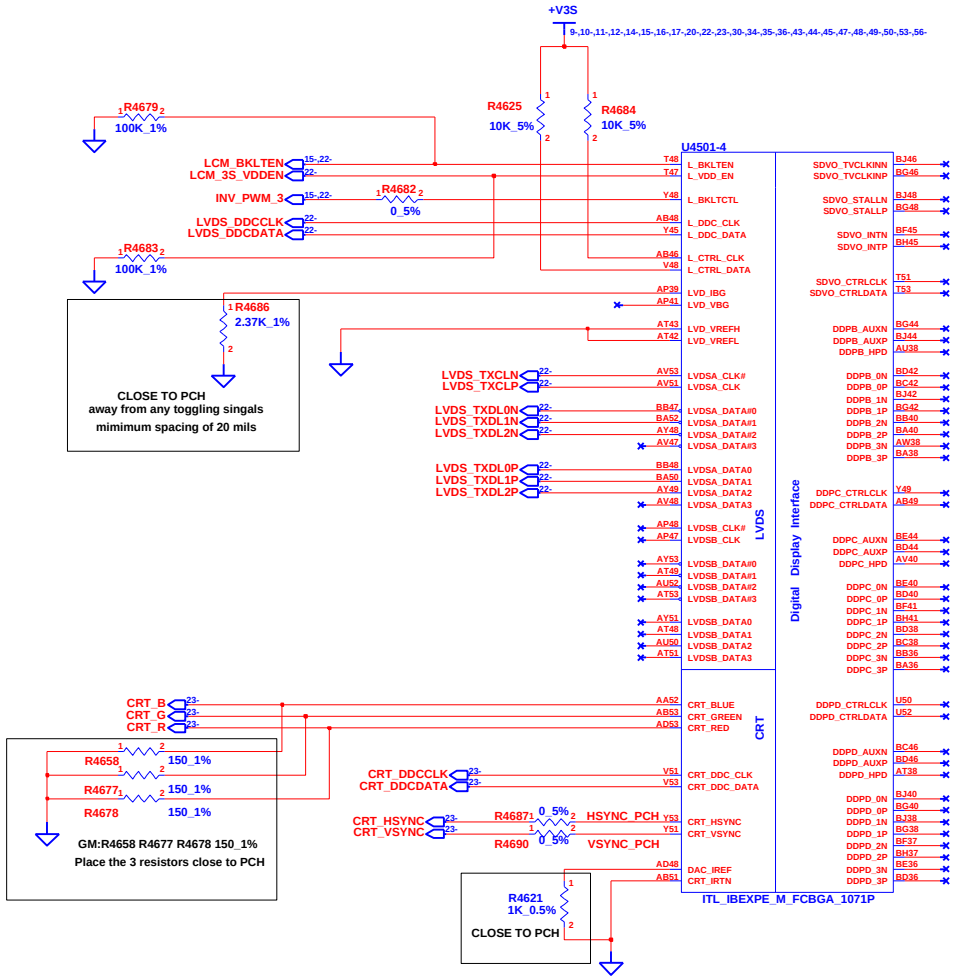

CHANGE by	Drawer_Name	7-Jan-2010	

INVENTEC

TITLE: *Calcutta10*
PCH-4

SIZE	CODE	DOC. NUMBER	REV
A3	CS	Model_No	000

SHEET 46 OF 56

www.vinafix.vn

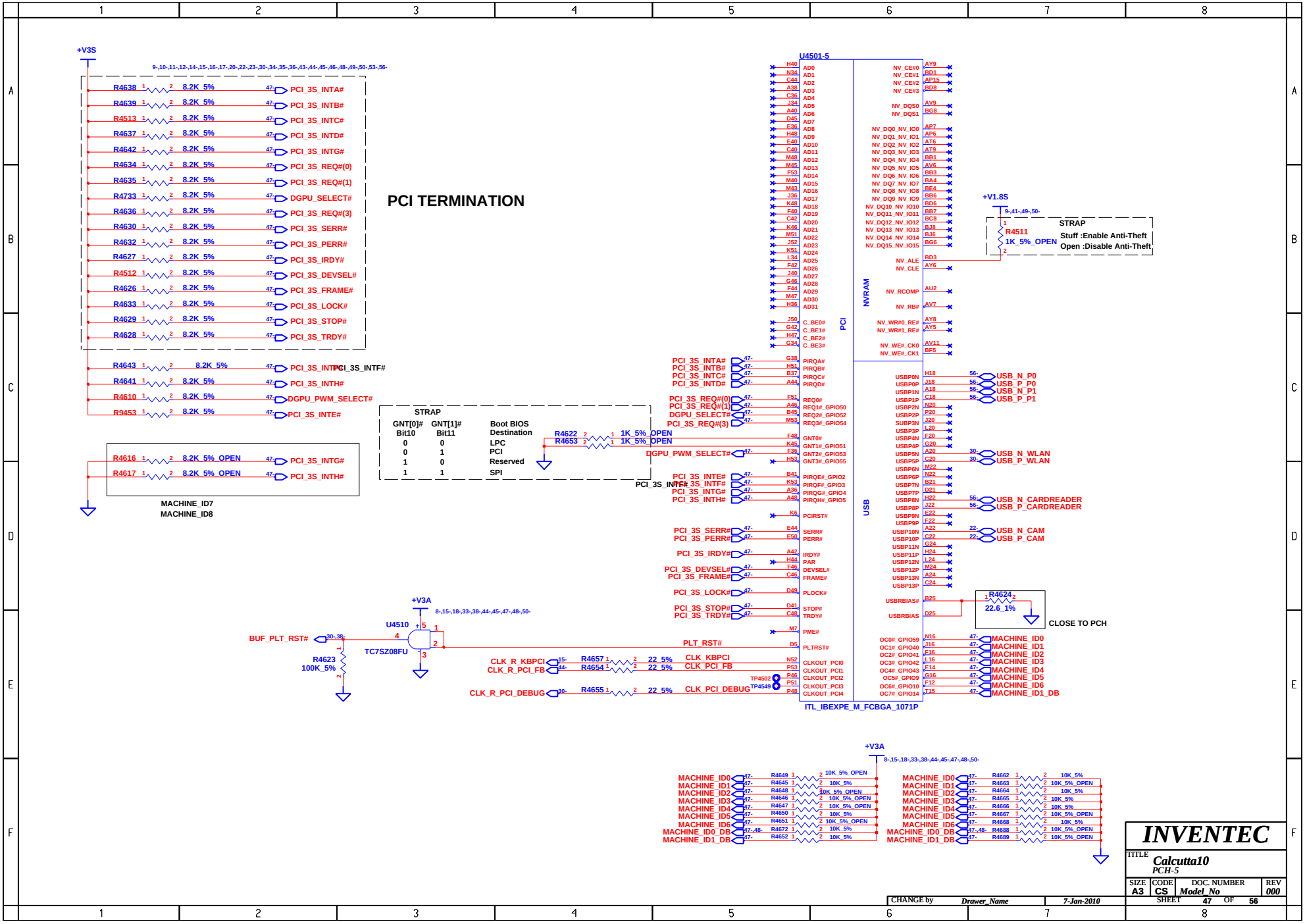

www.vinafix.vn

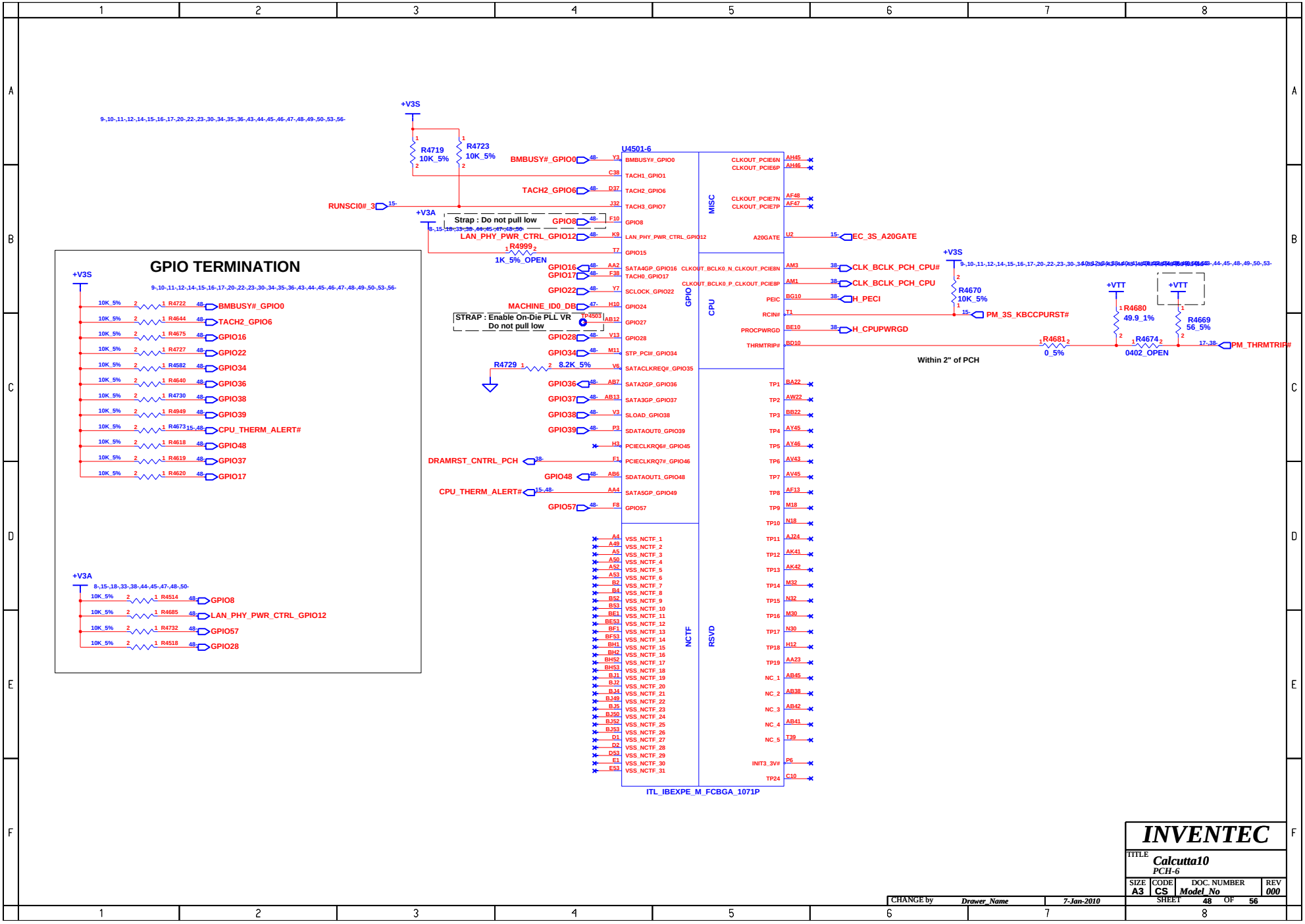

www.vinafix.vn

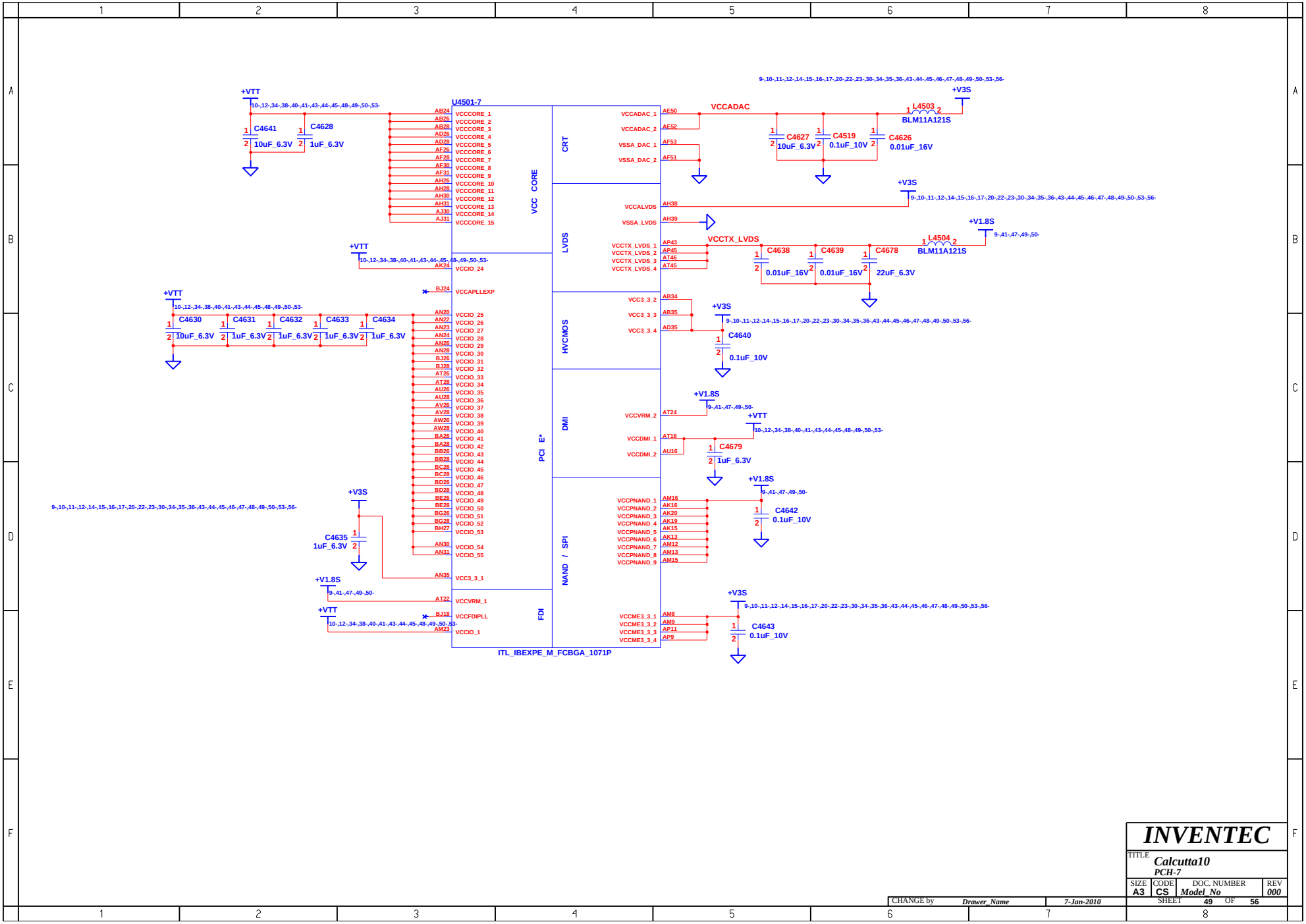

www.vinafix.vn

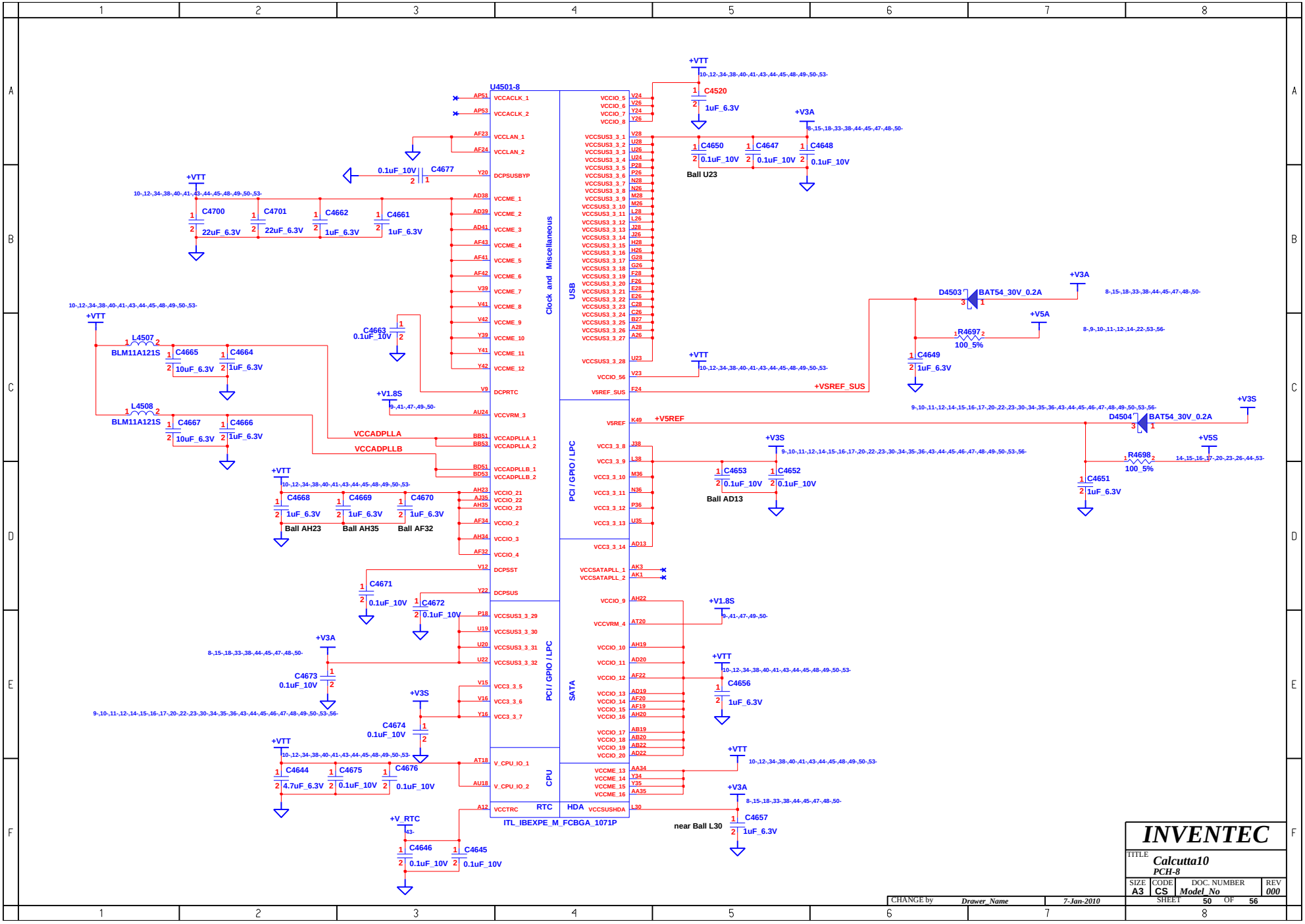

INVENTEC			
TITLE Calcutta10 PCH-8			
SIZE A3	CODE CS	DOC. NUMBER Model_No	REV 000
CHANGE by Drawer_Name	7-Jan-2010	SHEET 50 OF 56	

www.vinafix.vn

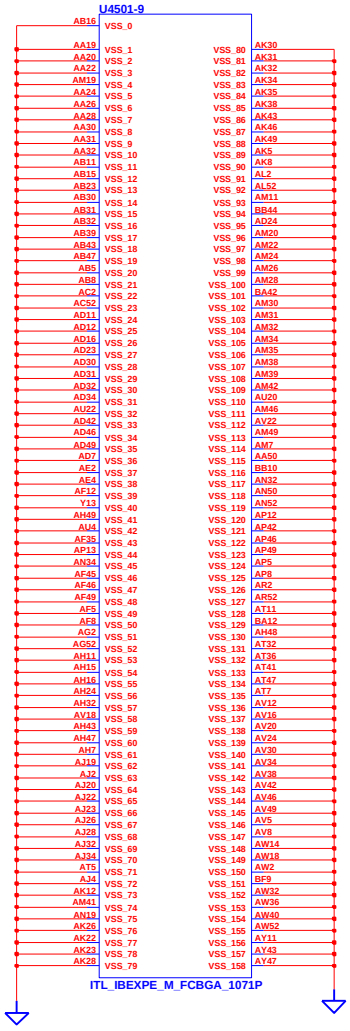

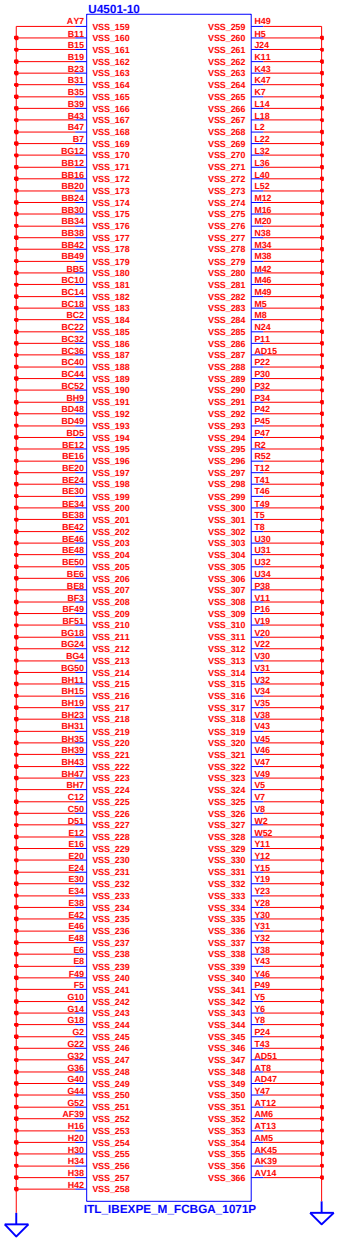

CHANGE by	Drawer_Name	7-Jan-2010	

INVENTEC

TITLE *Calcutta10*
PCH-9

SIZE	CODE	DOC. NUMBER	REV
A3	CS	Model_No	000

SHEET 51 OF 56

www.vinafix.vn

BLANK

INVENTEC			
TITLE Calcutta10 3D SENSOR			
SIZE A3	CODE CS	DOC. NUMBER Model_No	REV 000
CHANGE by Drawer_Name	7-Jan-2010	SHEET 52 OF 56	

www.vinafix.vn

EMI

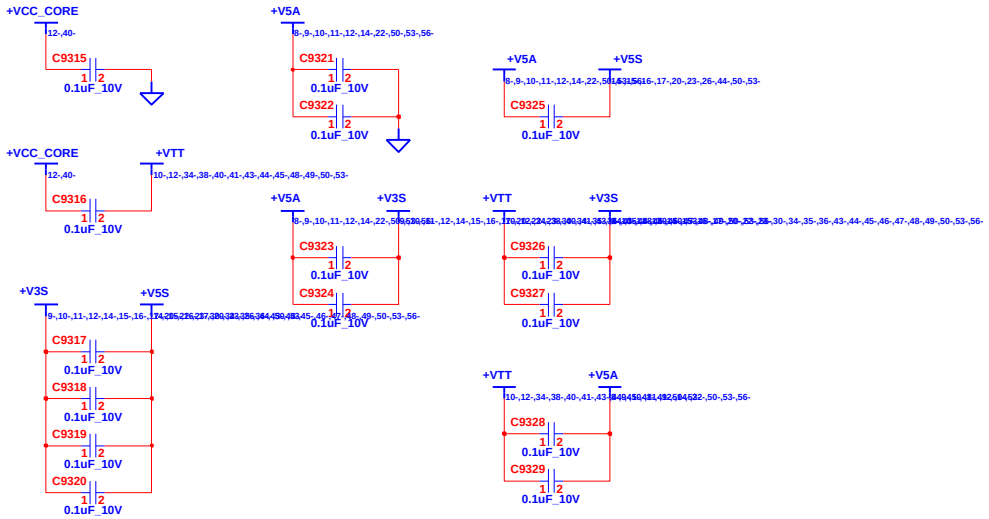

CHANGE by	Drawer_Name	7-Jan-2010	

INVENTEC

TITLE: Calcutta10 EMI

SIZE	CODE	DOC. NUMBER	REV
A3	CS	Model_No	000

SHEET 53 OF 56

www.vinafix.vn

TOUCH PAD SWITCH BOARD

Connect to Touchpad Module

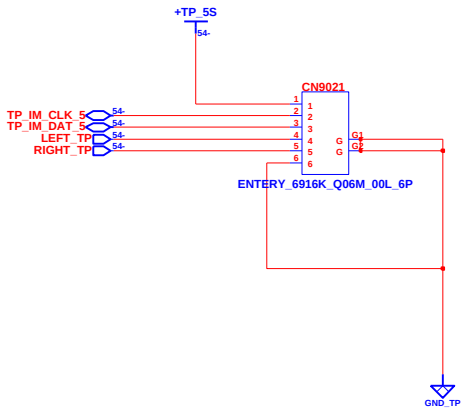

Connect to Mainboard's TP connector

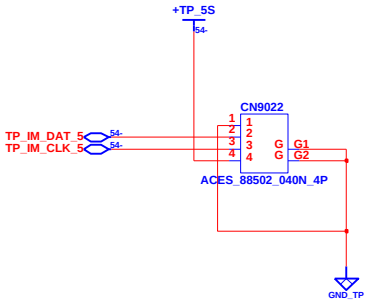

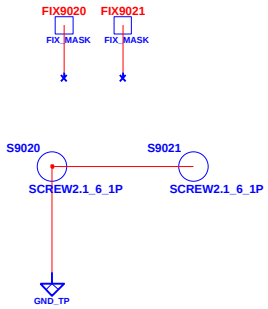

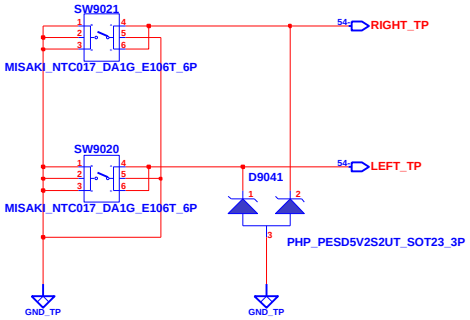

CHANGE by	Drawer_Name	2-Mar-2010	

INVENTEC

TITLE *Calcutta10*
TP SWITCH BOARD

SIZE	CODE	DOC. NUMBER	REV
A3	CS	Model_No	000

SHEET 54 OF 56

www.vinafix.vn

POWER BOARD

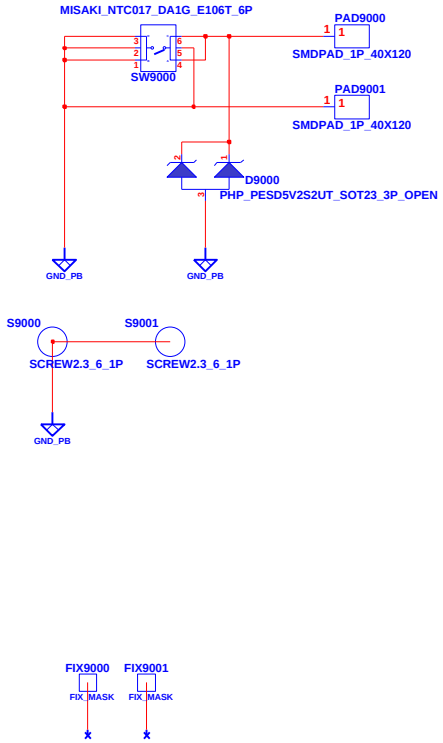

CHANGE by	Drawer_Name	24-Feb-2010	

INVENTEC

TITLE *Calcutta10*
POWER BOARD

SIZE	CODE	DOC. NUMBER	REV
A3	CS	*Model_No*	*000*

SHEET 55 OF 56

www.vinafix.vn

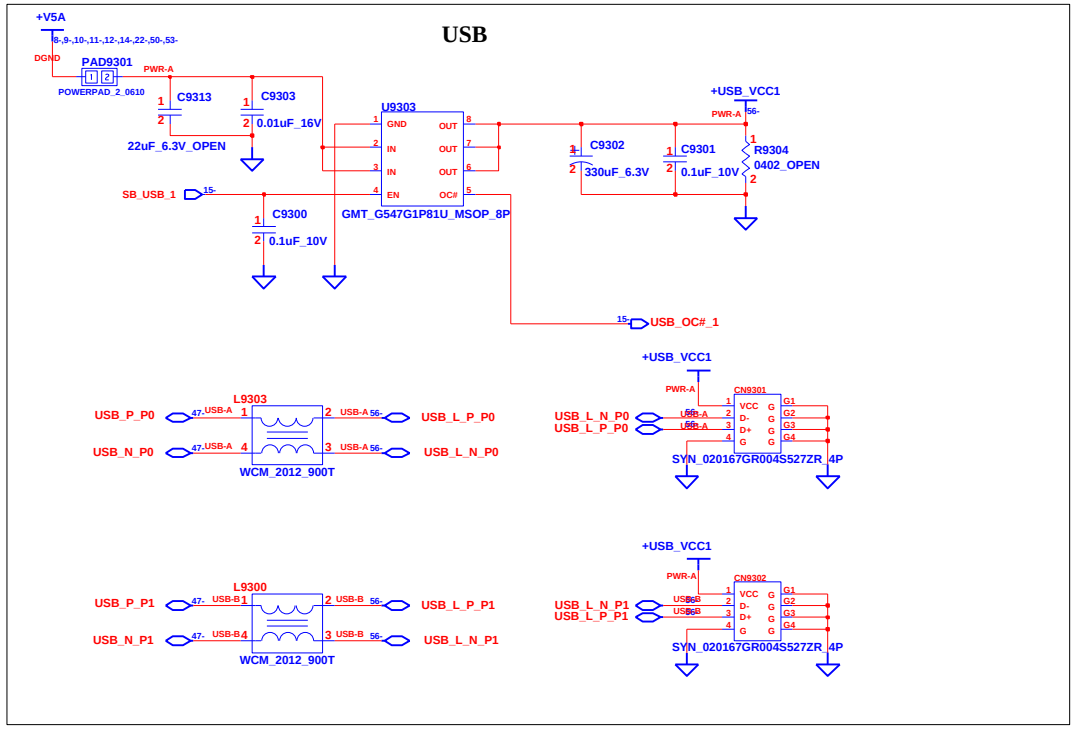

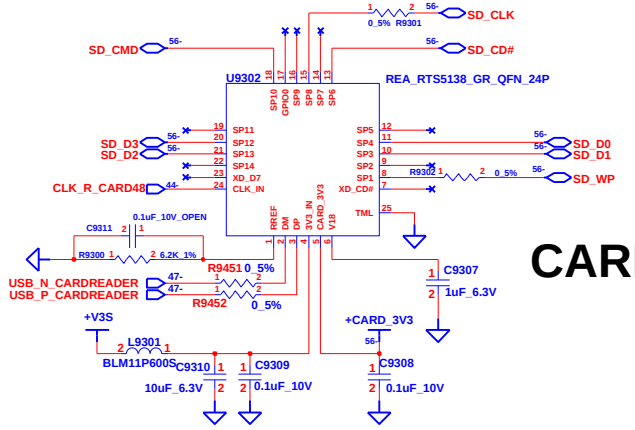

CARD READER

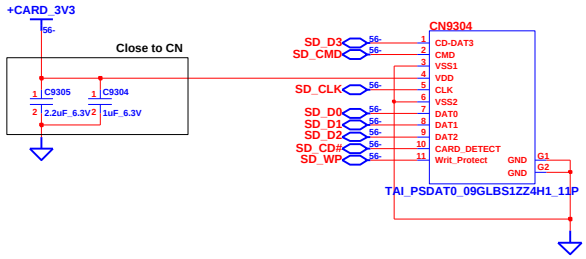

CHANGE by	Drawer_Name	7-Jan-2010	

INVENTEC

TITLE: *Calcutta10*
Carder Reader/USB

SIZE	CODE	DOC. NUMBER	REV
A3	CS	*Model_No*	*000*

SHEET 56 OF 56

www.vinafix.vn